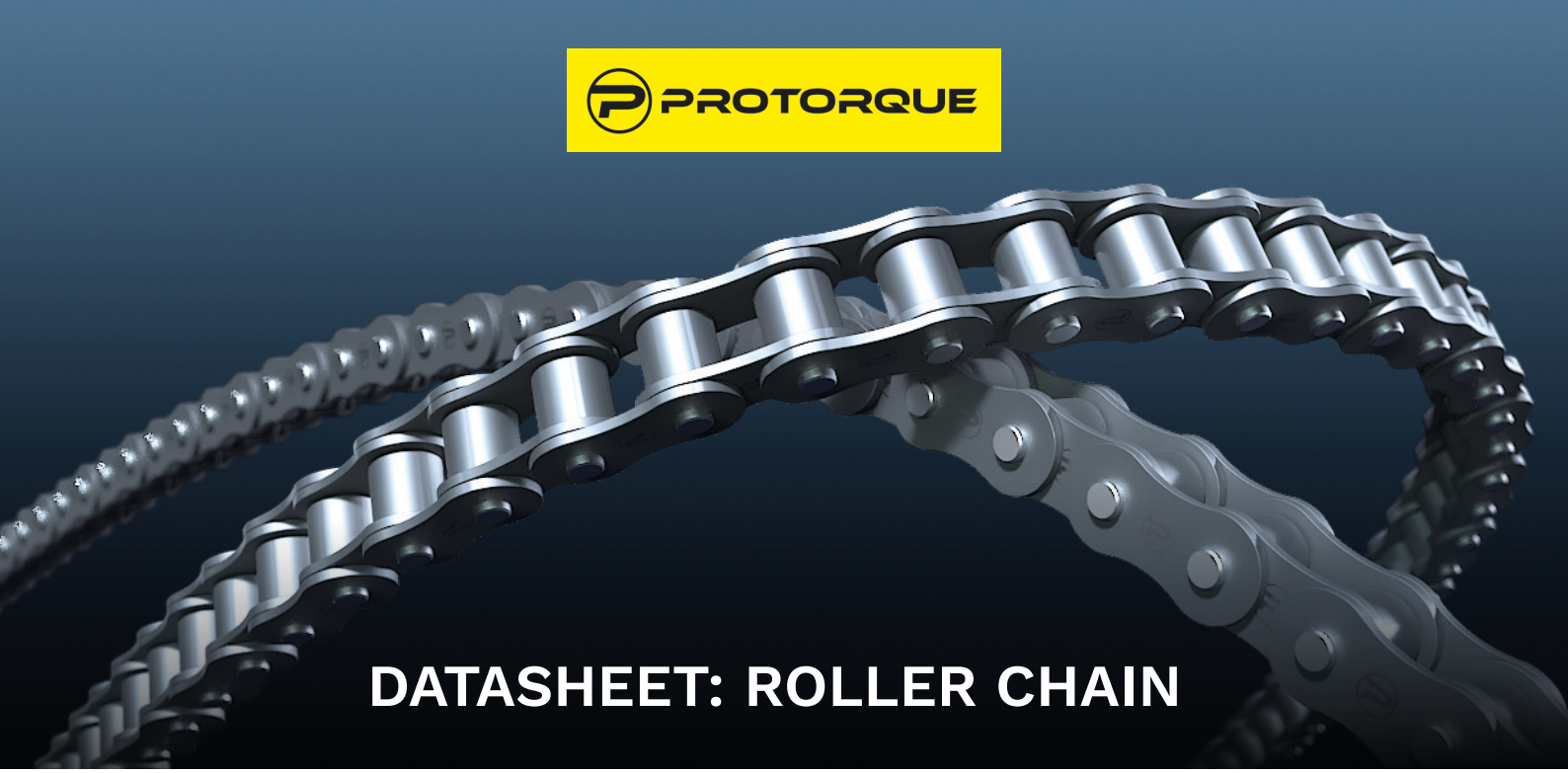

DATASHEET: ROLLER CHAIN

A fit-for-function chain suitable for a broad range of industrial applications and is often used in all different industries like material handling and wood industries.

Properties

- Temperature operating range between -10°C to +80 °C with standard lubrication.
- Standard lubrication can be used on all chains used for common types of applications, directly out of the box.
- All Protorque roller chains are pre-loaded to secure minimal start up adjustments.
- Protrque chains are ISO606 - DIN 8187 - DIN 8188 and meet RoHS and REACH requirements.

Protorque Standard Roller Chain

Efficient, reliable and fit-for-function roller chain suitable for a broad range of industrial applications and is used in industries such as light material and wood industries.

Protorque PLUS Roller Chain

Protorque PLUS is suitable for demanding applications, and it is the perfect solution in a wide range of applicaton within lifting, transporting or transmitting power.

Protorque Corrosion Resistant Roller Chain

Corrosion resistant roller chains are your best option when you need reliable performance in tough environments, or contact with sensitive materials. Choose from nickel plated, zinc plated and stainless steel.

Protorque simplex, duplex and triplex roller chains are designed to run in sprockets according to DIN 8187/DIN 8188 or ISO 606.

TECHNICAL INFORMATION

Simplex

Single strand roller chain

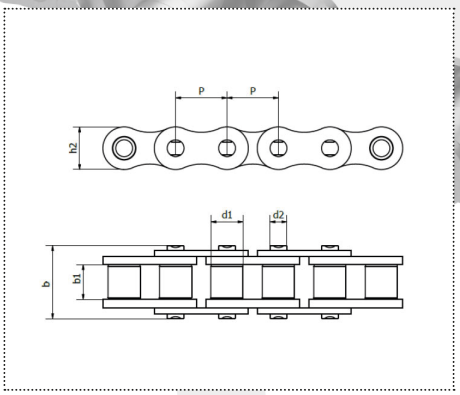

Simplex						
ISO 4184	Pitch P (IN)	PITCH P (MM)	Max roller dia d1 (mm)	min. inner width b1 (mm)	breaking load (kn)	weight (kg/m)
06B-1	3/8	9.525	6.35	5.72	8.9	0.41
08B-1	1/2	12.7	8.51	7.75	17.8	0.69
10B-1	5/8	15.875	10.16	9.65	22.2	0.93
12B-1	3/4	19.05	12.07	11.68	28.9	1.15
16B-1	1	25.4	15.88	17.02	60	2.71
20B-1	1 1/4	31.75	19.05	19.56	95	3.7
24B-1	1 1/2	38.1	25.4	25.4	160	7.1
28B-1	1 3/4	44.45	27.94	30.99	200	8.5
32B-1	2	50.8	29.21	30.99	250	10.25
40B-1	2 1/2	63.5	39.37	37.1	355	16.35
48B-1	3	76.2	48.26	45.72	560	25

Duplex

Double strand roller chain

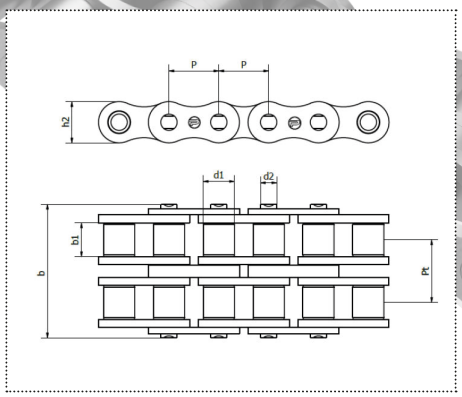

Duplex						
ISO 4184	Pitch P (IN)	PITCH P (MM)	Max roller dia d1 (mm)	min. inner width b1 (mm)	breaking load (kn)	weight (kg/m)
06B-2	3/8	9.525	6.35	5.72	16.9	0.77
08B-2	1/2	12.7	8.51	7.75	31.1	1.34
10B-2	5/8	15.875	10.16	9.65	44.5	1.84
12B-2	3/4	19.05	12.07	11.68	57.8	2.31
16B-2	1	25.4	15.88	17.02	106	5.42
20B-2	1 1/4	31.75	19.05	19.56	170	7.2
24B-2	1 1/2	38.1	25.4	25.4	280	13.4
28B-2	1 3/4	44.45	27.94	30.99	360	16.6
32B-2	2	50.8	29.21	30.99	450	21
40B-2	2 1/2	63.5	39.37	37.1	630	32
48B-2	3	76.2	48.26	45.72	1000	50

Triplex

Triple strand roller chain

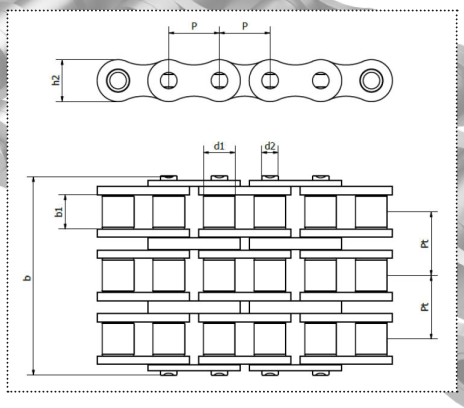

Triplex						
ISO 4184	Pitch P (IN)	PITCH P (MM)	Max roller dia d1 (mm)	min. inner width b1 (mm)	breaking load (kn)	weight (kg/m)
06B-3	3/8	9.525	6.35	5.72	24.9	1.16
08B-3	1/2	12.7	8.51	7.75	44.5	2.03
10B-3	5/8	15.875	10.16	9.65	66.7	2.77
12B-3	3/4	19.05	12.07	11.68	86.7	3.46
16B-3	1	25.4	15.88	17.02	160	8.13
20B-3	1 1/4	31.75	19.05	19.56	250	10.82
24B-3	1 1/2	38.1	25.4	25.4	425	20.1
28B-3	1 3/4	44.45	27.94	30.99	530	24.92
32B-3	2	50.8	29.21	30.99	670	31.56
40B-3	2 1/2	63.5	39.37	37.1	950	48.1
48B-3	3	76.2	48.26	45.72	1500	75

PROTORQUE

YOUR AUTHORISED DISTRIBUTOR IS:

JENS S TRANSMISJONER A/S
Enebakkveien 117
0680 Oslo Norge

Telephone: +47 23 06 04 00
Email: post@jens-s.no
www.jens-s.no