Flanges for Timing Belt Pulleys

Material: Steel, zinc-plated.

Flanges for timing belt pulleys, for custom-made parts or serial production. For economical reason, normally the flanges are mounted only at the smaller pulley. Often, the flanges get fixed by beading: On a turntable, with a rolling tool, hub material will get shaped over the flange. A beading material overhang of 0.5mm is recommended.

Sold by piece. Other sizes are available on request.

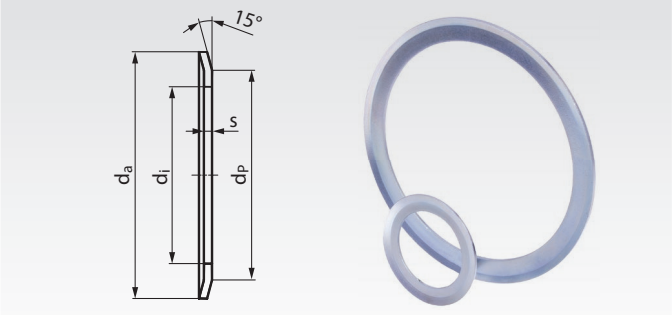

Ordering Details: e.g.: 2 Pieces Product No. 160 101 00, flange 0.5mm, Ø 13 x 10 x 6mm

Product No.	s mm	d_a mm	d_P mm	d_i mm	Weight g
160 101 00	0,5	13	10	6	1
160 101 01	0,5	15	12	8	1
160 101 02	0,5	16	13	9,5	1
160 101 04	0,5	18	15	11,5	1
160 101 05	0,5	19,5	17,5	12	1
160 101 06	0,5	23	17,5	12	1
160 101 07	0,5	23	20	14	1
160 101 08	0,5	25	22	15	1
160 101 09	0,5	28	24	18	1
160 101 10	0,5	32	28	21,5	1
160 101 11	0,5	36	31	25	2
160 101 12	0,5	38	34	28	3
160 101 13	0,5	42	38	30,5	3
160 101 14	0,5	48	43,5	37	3
160 102 00	1	19,5	17,5	12	1
160 102 01	1	23	17,5	12	1
160 102 02	1	23	20	14	2
160 102 03	1	25	22	15	3
160 102 04	1	28	24	18	3
160 102 05	1	32	28	21,5	3
160 102 06	1	36	31	25	4
160 102 07	1	38	34	28	4
160 102 08	1	42	38	30,5	5
160 102 09	1	44	40	33	5
160 102 10	1	48	43,5	37	6
160 102 11	1	51	47,5	40	7
160 102 12	1	54	50,5	43	7
160 102 13	1	57	53	46	7
160 102 14	1	60	57	47	10
160 102 15	1	63	57	48	10
160 102 16	1	66	61,5	52	10
160 102 17	1	71	65	56	12
160 102 18	1	75	68,5	60	13
160 102 19	1	83	76,5	68	14
160 102 20	1	87	82,5	72	15
160 102 21	1	91	85,5	76	16
160 102 22	1	93	89	80	14
160 102 23	1	97	93	83	15
160 102 24	1	106	101	90	20
160 102 25	1	119	113,5	103	22
160 102 26	1	131	125,5	115	25

Product No.	s mm	d_a mm	d_P mm	d_i mm	Weight g
160 103 00	1,5	36	31	25	6
160 103 01	1,5	38	34	28	6
160 103 02	1,5	42	38	30,5	8
160 103 03	1,5	44	40	33	8
160 103 04	1,5	48	43,5	37	9
160 103 05	1,5	51	47,5	40	10
160 103 06	1,5	54	50,5	43	10
160 103 07	1,5	57	53	46	11
160 103 08	1,5	60	57	47	13
160 103 09	1,5	63	57	48	16
160 103 10	1,5	66	61,5	52	16
160 103 11	1,5	71	65	56	18
160 103 12	1,5	75	68,5	60	20
160 103 13	1,5	79	73,5	64	20
160 103 14	1,5	83	76,5	68	21
160 103 15	1,5	87	82,5	72	22
160 103 16	1,5	91	85,5	76	21
160 103 17	1,5	93	89	80	21
160 103 18	1,5	97	93	83	24
160 103 19	1,5	98	92	79,3	32
160 103 20	1,5	103	97	86	30
160 103 21	1,5	106	101	90	30
160 103 22	1,5	111	106	94	30
160 103 23	1,5	115	110	99	32
160 103 25	1,5	119	113,5	103	33
160 103 26	1,5	123	117,5	107	33
160 103 27	1,5	127	122	111	36
160 103 28	1,5	135	130	119	37
160 103 30	1,5	140	134,5	123	42
160 103 31	1,5	143	139	127	42
160 103 33	1,5	148	143	132	42
160 103 34	1,5	152	147,5	136	44
160 103 35	1,5	158	154	142	44
160 103 38	1,5	168	163	149,5	45
160 103 39	1,5	184	179	165	62
160 103 40	1,5	192	187	173	64
160 103 42	1,5	200	195	181	67
160 104 00	2,5	127	120,2	104,7	82
160 104 01	2,5	138	130	108	110
160 104 02	2,5	146	138	116	120
160 104 03	2,5	154	146	122	132
160 104 04	2,5	160	150	128	139
160 104 05	2,5	168	162	135	152
160 104 06	2,5	183	170	145	199
160 104 07	2,5	188	180	158	159
160 104 09	2,5	198	188	165	157
160 104 10	2,5	200	192,8	172	154
160 104 11	2,5	211	198	173	218
160 104 12	2,5	226	214	190	227
160 104 14	2,5	240	224	192	317
160 104 15	2,5	256	240	220	258
160 104 16	2,5	256	247	225	230
160 104 18	2,5	296	287	252	370

Custom-made timing belt pulleys from our own production available at short time.

Fixing Plates for Timing Belts

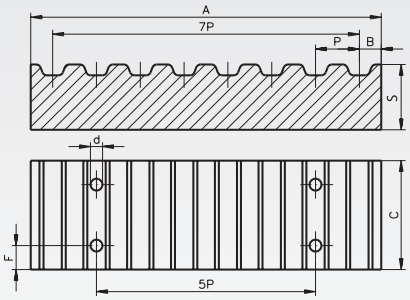

Material: Aluminium UNI 9006-T6.

Ordering Details: e.g.: Product No. 160 699 00, Fixing Plate, Pitch T2.5 Width 6 mm

The fixing plates are used to connect the belt ends. Practical examples see page 172.

T-Profile

Product No.	Profile	P mm	Belt Width mm	F mm	d mm	B mm	A mm	S mm	C mm	Weight g
160 699 00	T2,5	2,5	6	4	4,5	1,5	20,5	5	19	5
160 799 00	T2,5	2,5	10	4	4,5	1,5	20,5	5	24	6
162 699 00	T5	5	10	6	5,5	3,4	41,8	8	29	21
162 799 00	T5	5	16	6	5,5	3,4	41,8	8	35	27
162 899 00	T5	5	25	6	5,5	3,4	41,8	8	44	40
162 898 00	T5	5	32	6	5,5	3,4	41,8	8	51	58
164 699 00	T10	10	16	8	9,0	5,0	80,0	15	41	112
164 799 00	T10	10	25	8	9,0	5,0	80,0	15	50	140
164 899 00	T10	10	32	8	9,0	5,0	80,0	15	57	160
164 999 00	T10	10	50	8	9,0	5,0	80,0	15	75	220

AT-Profile

Product No.	Profile	P mm	Belt Width mm	F mm	d mm	B mm	A mm	S mm	C mm	Weight g
166 699 00	AT5	5	10	6	5,5	3,4	41,8	8	29	21
166 799 00	AT5	5	16	6	5,5	3,4	41,8	8	35	25
166 899 00	AT5	5	25	6	5,5	3,4	41,8	8	44	40
166 898 00	AT5	5	32	6	5,5	3,4	41,8	8	51	58
168 699 00	AT10	10	16	8	9,0	5,0	80,0	15	41	108
168 799 00	AT10	10	25	8	9,0	5,0	80,0	15	50	134
168 899 00	AT10	10	32	8	9,0	5,0	80,0	15	57	160
168 999 00	AT10	10	50	8	9,0	5,0	80,0	15	75	220

HTD-Profile

Product No.	Profile	P mm	Belt Width mm	F mm	d mm	B mm	A mm	S mm	C mm	Weight g
171 199 00	3M	3	9	4	4,5	2,0	25,0	6	24	8
171 399 00	3M	3	15	4	4,5	2,0	25,0	6	30	10
173 199 00	5M	5	10	6	5,5	3,4	41,8	8	28	17
173 399 00	5M	5	15	6	5,5	3,4	41,8	8	34	22
173 599 00	5M	5	25	6	5,5	3,4	41,8	8	44	30
175 199 00	8M	8	20	8	9,0	5,0	66,0	15	45	95
175 399 00	8M	8	30	8	9,0	5,0	66,0	15	55	120
175 599 00	8M	8	50	8	9,0	5,0	66,0	15	75	165

Inch-Profile

Product No.	Profile	P mm	Belt Width Inch	Belt Width mm	F mm	d mm	B mm	A mm	S mm	C mm	Weight g
180 899 00	XL	5,08	0,37	9,53	6	5,5	3,5	42,5	8	28,5	23
182 699 00	L	9,525	0,50	12,70	8	9,0	5,0	76,6	15	39,0	108
182 799 00	L	9,525	0,75	19,10	8	9,0	5,0	76,6	15	45,0	125
182 899 00	L	9,525	1,00	25,40	8	9,0	5,0	76,6	15	51,5	143
184 599 00	H	12,7	0,75	19,10	10	11,0	9,0	106,9	22	51,0	295
184 699 00	H	12,7	1,00	25,40	10	11,0	9,0	106,9	22	57,5	330
184 799 00	H	12,7	1,50	38,10	10	11,0	9,0	106,9	22	70,0	385
184 899 00	H	12,7	2,00	50,80	10	11,0	9,0	106,9	22	83,0	456

Tensioning Rollers and Tensioning Elements for Timing Belts

Tensioning rollers are used for tensioning on the outside of the belt (back of belt). The tensioning rollers can either be mounted rigidly or be combined with tensioning elements to make up an elastic belt tensioner.

Note: tensioning rollers mounted on the outside of the closed span, shorten the service life of the belt due to alternate bending conditions. This means that when an outside tensioning roller is mounted a corrective factor of at least 1.2 has to be used when calculating the drive. If the belt is tensioned from the inside, a toothed pulley must be used (pulley with ball bearing only made to order).

Tensioning Rollers

Material: Short roller made from high-grade industrial plastic.

Mounted on a suitable tensioning element, the tensioning roller becomes a ready-to-mount belt tensioner or on its own it can be used as idler. It runs on two permanently lubricated 2-Z ball bearings.

Tensioning element has to be ordered separately.

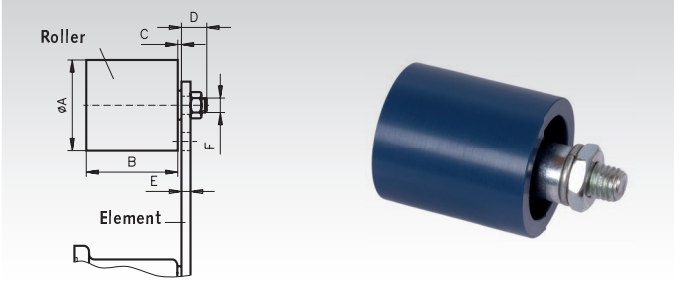

Product-No.	Diameter A mm	Product No. Tensioning Element matching	B mm	C mm	D mm	E max. mm	F mm	Weight kg
140 872 00	30	**140 800 00**	35	2	14	5	M8	0,08
140 874 00	40	**140 801 00**	45	6	16	7	M10	0,17
140 876 00	60	**140 803 00**	60	8	17	8	M12	0,40
140 878 00	80	**140 804 00**	90	8	25	10	M20	1,15

Tensioning Elements

Material: Lever made from St52, housing up to Ø 78 mm made from sintered steel, over Ø 78 mm made from grey cast iron GG20.
Tensioning elements are painted blue and are supplied with a zinc-plated screw and a spring washer.

These tensioning element can be used for tensioning all common kinds of chain and belt drives. The spring elements are based on highly-elastic natural rubber with a good shape memory and are designed for applications in temperatures from -40° to +80°C. Can be used for both tensioning directions.

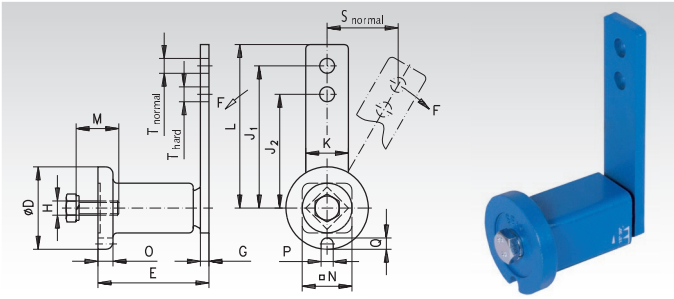

Product No.	Size	F max. normal N	F max. hard N	s max. normal mm	s max. hard mm	D mm	E mm	G mm	H mm	J_1 mm	J_2 mm	K mm	L mm	M mm	N mm	O mm	P mm	Q mm	T mm	M_A Nm	Weight kg
140 800 00	0	80	106	40	30	35	$51^{+1,0}_{-0,5}$	5	M6	80	60	20	90	20	22	6	8	5	8,5	10	0,2
140 801 00	1	135	168	50	40	45	$64^{+1,0}_{-0,5}$	5	M8	100	80	25	112,5	25	30	8	8,5	6	10,5	25	0,4
140 802 00	2	350	437	50	40	58	$79^{+1,5}_{-0,5}$	7	M10	100	80	30	115	30	35	10,5	8,5	8	10,5	49	0,6
140 803 00	3	800	1040	65	50	78	$108^{+2}_{-0,5}$	8	M12	130	100	50	155	40	52	15	10,5	10	12,5	86	1,7
140 804 00	4	1500	1875	87,5	70	95	$140^{+2}_{-0,5}$	10	M16	175	140	60	205	40	66	15	12,5	12	20,5	210	3,55

Other tensioning element versions (stainless, zinc plated etc.) see page 116.

V-Belt Tensioner with Mounted V-Belt Pulley

Material: Housings up to Ø 78 mm made from sintered steel, over Ø 78 mm made from grey cast iron GG20.
Lever St52, V-belt pulley cast steel.

Matching narrow V-belts DIN 2215 und DIN 7753.

Pulley with sealed ball bearings, permanently lubricated.

Measur A of the pulley can be adjusted by distance-washers on the axis, which is screwed onto the tensioner.

Can be used for both tensioning directions.

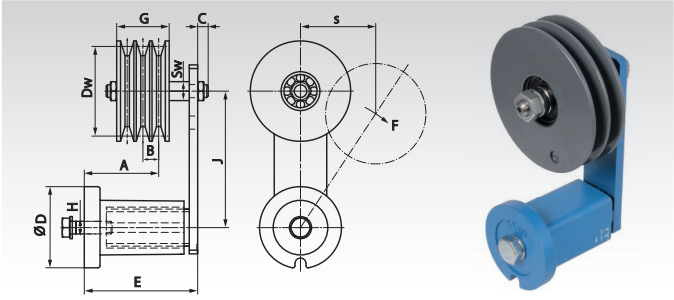

Ordering Details: e.g.: Product No. 140 850 01, SPZ, 1 Groove, Dw=90mm

Product No.	Profile	No. of Grooves	Dw mm	Tensioner Size	$F_{max.}$ N	$Speed_{max.}$ min^{-1}	$s_{max.}$ mm	A mm	B mm	C mm	Ø D mm	E mm	J mm	G mm	H mm	sw mm	Weight kg
140 851 01	SPZ (10)	1	90	2	350	10000	50	20-43	12	13	58	79	100	16	M10	19	2,0
140 851 02	SPZ (10)	2	90	2	350	10000	50	31-48	12	13	58	79	100	28	M10	19	2,3
140 851 03	SPZ (10)	3	90	2	350	10000	50	31-37	12	13	58	79	100	40	M10	19	2,6
140 851 11	SPA (13)	1	90	2	350	7400	50	15-36	15	19	58	79	100	20	M10	27	2,0
140 851 12	SPA (13)	2	90	2	350	7400	50	20-42	15	19	58	79	100	35	M10	27	2,3
140 852 01	SPA (13)	1	90	3	800	7400	65	34-64	15	19	78	108	130	20	M12	27	3,1
140 852 02	SPA (13)	2	90	3	800	7400	65	49-70	15	19	78	108	130	35	M12	27	3,5
140 852 03	SPA (13)	3	90	3	800	7400	65	49-70	15	19	78	108	130	50	M12	27	3,8
140 852 04	SPA (13)	1	125	3	800	5300	65	33-63	15	19	78	108	130	20	M12	27	3,9
140 852 05	SPA (13)	2	125	3	800	5300	65	49-70	15	19	78	108	130	35	M12	27	4,8
140 854 01	SPB (17)	1	125	3	800	5300	65	35-65	19	19	78	108	130	25	M12	27	4,2
140 854 02	SPB (17)	2	125	3	800	5300	65	48-69	19	19	78	108	130	44	M12	27	5,3
140 854 03	SPB (17)	3	125	4	1500	5300	87,5	104-107	19	17	95	140	175	63	M16	27	7,9
140 854 04	SPB (17)	3	140	4	1500	4000	87,5	104-107	19	17	95	140	175	63	M16	27	9,2

Tensioning Rollers

Material: Short roller made from high-grade industrial plastic.

Tensioning rollers are used for tensioning (or as an idler) on the outside of the belt (back of belt). The tensioning rollers can either be mounted rigidly or be combined with tensioning elements to make up an elastic belt tensioner.

It runs on two permanently lubricated 2-Z ball bearings.

Tensioning element has to be ordered separately.

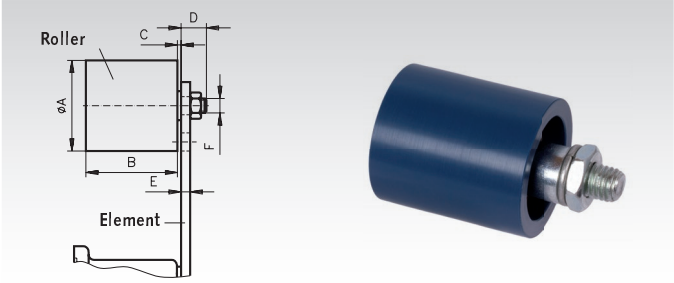

Ordering Details: e.g.: Product No. 140 872 00, Tensioning Roller Ø 30 mm

Product-No.	Diameter A mm	Product No. Tensioning Element matching	B mm	C mm	D mm	E max. mm	F mm	Weight kg
140 872 00	30	**140 800 00**	35	2	14	5	M8	0,08
140 874 00	40	**140 801 00**	45	6	16	7	M10	0,17
140 876 00	60	**140 803 00**	60	8	17	8	M12	0,40
140 878 00	80	**140 804 00**	90	8	25	10	M20	1,15

Tensioning Elements in Standard Version

Material: Housing up to Ø 78 mm made from sintered steel, over Ø 78 mm made from grey cast iron GG20, lever made from St52.
Can be used for tensioning all common kinds of chain and belt drives. The elastomeric inserts are based on highly-elastic natural rubber with a good shape memory and are designed for applications in temperatures from -40° to +80°C
The tensioning elements are painted blue and supplied with a zinc-plated screw and spring washer. Can be used for both tensioning directions. Temperature range: -40° to +80°C.

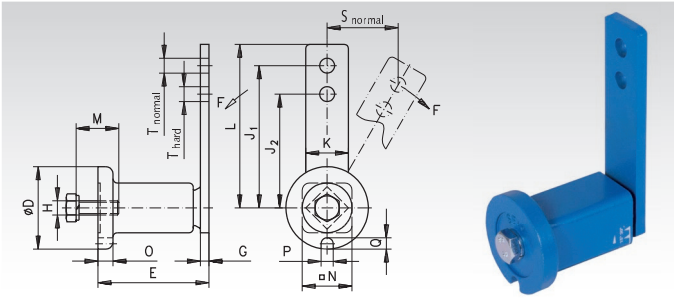

Ordering Details: e.g.: Product No. 140 800 00, Tensioning Element Ø 35 mm

Product No.	Size	F max. normal N	F max. hard N	s max. normal mm	s max. hard mm	D mm	E mm	G mm	H mm	J_1 mm	J_2 mm	K mm	L mm	M mm	N mm	O mm	P mm	Q mm	T mm	M_A Nm	Weight kg
140 800 00	0	80	106	40	30	35	51 $^{+1,0}_{-0,5}$	5	M6	80	60	20	90	20	22	6	8	5	8,5	10	0,2
140 801 00	1	135	168	50	40	45	64 $^{+1,0}_{-0,5}$	5	M8	100	80	25	112,5	25	30	8	8,5	6	10,5	25	0,4
140 802 00	2	350	437	50	40	58	79 $^{+1,5}_{-0,5}$	7	M10	100	80	30	115	30	35	10,5	8,5	8	10,5	49	0,6
140 803 00	3	800	1040	65	50	78	108 $^{+2}_{-0,5}$	8	M12	130	100	50	155	40	52	15	10,5	10	12,5	86	1,7
140 804 00	4	1500	1875	87,5	70	95	140 $^{+2}_{-0,5}$	10	M16	175	140	60	205	40	66	15	12,5	12	20,5	210	3,55