Chain Tensioning Wheels KSP with Bearing for Single-Strand Roller Chain DIN ISO 606 (ex DIN 8187)

Material: Sprocket steel C45, burnished.
Bearing made from roller bearing steel.

Ready-to-mount idlers, complete with bearing.

Cost-efficient. Can be mounted at the deflection or tensioning points. Perfect workmanship and stable mounting of the ball bearing with shields on both sides guarantee a high resistance against breakage and wear. Easy to mount by the extra long internal ring. Also suitable for agricultural and textile machines. Maintenance-free bearing, with grease filling.

Temperature range: -20° to +120°C.

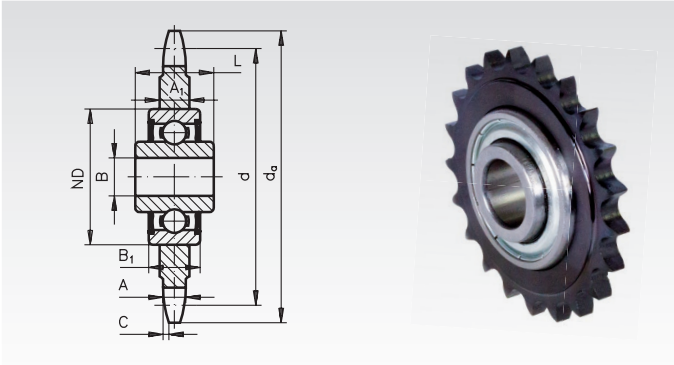

Ordering Details: e.g.: Product No. 140 000 00 KSP, 05 - B1

Product No.	DIN ISO	Pitch	Number of teeth	d_a mm	d mm	A mm	A_1 mm	C mm	B mm	ND mm	B_1 mm	L mm	Weight g
140 000 00	05 B-1	8mm	23	62,2	58,75	2,8	7,0	0,8	$16^{+0,26}_{+0,13}$	40	12	18,3	125
140 001 20	06 B-1	3/8 x 7/32“	20	64,3	60,89	5,3	7,0	1,0	$16^{+0,26}_{+0,13}$	40	12	18,3	135
140 001 00	06 B-1	3/8 x 7/32“	21	68,0	63,90	5,3	7,0	1,0	$16^{+0,26}_{+0,13}$	40	12	18,3	145
140 002 00	081	1/2 x 1/8“	18	78,9	73,14	3,0	7,0	1,3	$16^{+0,26}_{+0,13}$	40	12	18,3	170
140 003 16	083	1/2 x 3/16“	16	70,9	65,10	4,5	7,0	1,3	$16^{+0,26}_{+0,13}$	40	12	18,3	169
140 003 00	083	1/2 x 3/16“	18	78,9	73,14	4,5	7,0	1,3	$16^{+0,26}_{+0,13}$	40	12	18,3	195
140 005 14	08 B-1	1/2 x 5/16“	14	61,8	57,07	7,2	7,2	1,3	$16^{+0,26}_{+0,13}$	40	12	18,3	117
140 005 15	08 B-1	1/2 x 5/16“	15	65,5	61,09	7,2	7,2	1,3	$16^{+0,26}_{+0,13}$	40	12	18,3	145
140 005 16	08 B-1	1/2 x 5/16“	16	69,5	65,10	7,2	7,2	1,3	$16^{+0,26}_{+0,13}$	40	12	18,3	163
140 005 00	08 B-1	1/2 x 5/16“	18	77,8	73,14	7,2	7,2	1,3	$16^{+0,26}_{+0,13}$	40	12	18,3	210
140 005 20	08 B-1	1/2 x 5/16“	20	85,8	81,19	7,2	7,2	1,3	$16^{+0,26}_{+0,13}$	40	12	18,3	265
140 005 21	08 B-1	1/2 x 5/16“	21	89,7	85,22	7,2	7,2	1,3	$16^{+0,26}_{+0,13}$	40	12	18,3	289
140 006 13	10 B-1	5/8 x 3/8“	13	73,0	66,32	9,1	9,1	1,6	$16^{+0,26}_{+0,13}$	40	12	18,3	215
140 006 14	10 B-1	5/8 x 3/8“	14	78,0	71,34	9,1	9,1	1,6	$16^{+0,26}_{+0,13}$	40	12	18,3	245
140 006 15	10 B-1	5/8 x 3/8“	15	83,0	73,36	9,1	9,1	1,6	$16^{+0,26}_{+0,13}$	40	12	18,3	285
140 006 16	10 B-1	5/8 x 3/8“	16	88,0	81,37	9,1	9,1	1,6	$16^{+0,26}_{+0,13}$	40	12	18,3	325
140 006 00	10 B-1	5/8 x 3/8“	17	93,0	86,39	9,1	9,1	1,6	$16^{+0,26}_{+0,13}$	40	12	18,3	355
140 006 18	10 B-1	5/8 x 3/8“	18	98,3	91,42	9,1	9,1	1,6	$16^{+0,26}_{+0,13}$	40	12	18,3	405
140 006 21	10 B-1	5/8 x 3/8“	21	113,4	106,52	9,1	9,1	1,6	$16^{+0,26}_{+0,13}$	40	12	18,3	565
140 007 12	12 B-1	3/4 x 7/16“	12	81,5	73,60	11,1	11,1	2,0	$16^{+0,26}_{+0,13}$	40	12	18,3	280
140 007 13	12 B-1	3/4 x 7/16“	13	87,5	79,59	11,1	11,1	2,0	$16^{+0,26}_{+0,13}$	40	12	18,3	340
140 007 00	12 B-1	3/4 x 7/16“	15	99,8	91,63	11,1	11,1	2,0	$16^{+0,26}_{+0,13}$	40	12	18,3	470
140 007 16	12 B-1	3/4 x 7/16“	16	105,5	97,65	11,1	11,1	2,0	$16^{+0,26}_{+0,13}$	40	12	18,3	540
140 008 00	16 B-1	1“ x 17,02mm	12	109,0	98,14	16,2	16,2	2,5	$20^{+0}_{-0,01}$	47	14	17,7	705
140 008 15	16 B-1	1“ x 17,02mm	15	133,0	122,17	16,2	16,2	2,5	$20^{+0}_{-0,01}$	47	14	17,7	1185
140 008 17	16 B-1	1“ x 17,02mm	17	149,0	138,24	16,2	16,2	2,5	$20^{+0}_{-0,01}$	47	14	17,7	1545
140 009 00	20 B-1	1 1/4 x 3/4“	13	147,8	132,65	18,5	18,5	3,5	$25^{+0}_{-0,01}$	52	15	21,0	1610

Mounting Screws for tensioning Wheels KSP

Material: Steel C45, zinc-plated.

Product No. 140 000 01: Screw for chain tensioning wheels KSP up to size 12 B-1 (bore 16mm).

Product No. 140 008 01: Screw for chain tensioning wheel KSP, only for size 16 B-1 (bore 20mm).

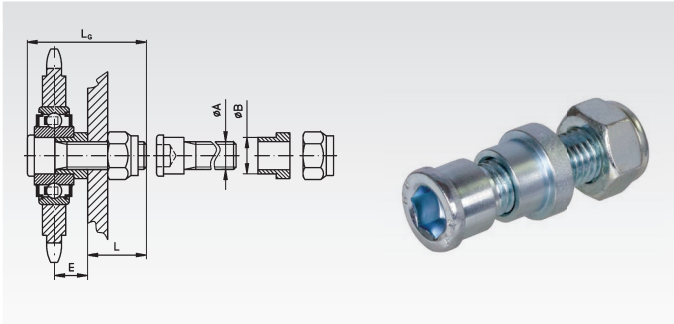

Product No.	A	B mm	E mm	L mm	L_G mm	Weight g
140 000 01	M12	16	15	25	52	80
140 008 01	M16	20	25	28	66	160

Loctite thread locking and bonding products page 811.

Chain Tensioning Wheels KSP-R with Bearing for Single-Strand Roller Chain DIN ISO 606, Stainless Steel

Material: Sprocket stainless steel 1.4305.
Ball bearing stainless steel.

Ready-to-mount idlers, complete with bearing.

Cost-efficient. Can be mounted at the deflection or tensioning points. Perfect workmanship and stable mounting of the ball bearing with shields on both sides guarantee a high resistance against breakage and wear. Maintenance-free bearing, with grease filling.

Temperature range: -20° to +120°C.

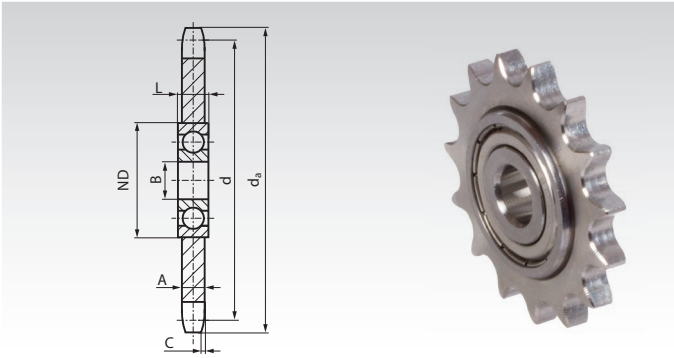

Ordering Details: e.g.: Product No. 140 990 01, Chain Tensioning Wheel KSP-R, 06 B-1

Product No.	DIN ISO	Pitch Inch	Number of teeth	d_a mm	d mm	A mm	C mm	B mm	ND mm	L mm	Weight kg
140 990 01	06 B-1	3/8 x 7/32"	15	49,5	45,81	5,3	1,0	$10^{+0}_{-0,008}$	30	9	0,06
140 990 05	08 B-1	1/2 x 5/16"	15	65,9	61,09	7,2	1,3	$10^{+0}_{-0,008}$	30	9	0,15
140 990 06	10 B-1	5/8 x 3/8"	15	83,2	76,36	9,1	1,6	$12^{+0}_{-0,008}$	37	12	0,27
140 990 07	12 B-1	3/4 x 7/16"	15	99,8	91,63	11,1	2,0	$12^{+0}_{-0,008}$	37	12	0,47
140 990 08	16 B-1	1" x 17,02mm	13	117,7	106,12	16,2	2,5	$20^{+0}_{-0,010}$	52	15	0,88

Sprocket Sets for Chain Tensioners Single, Stainless Steel

Material: Sprocket stainless steel 1.4305.
Ball bearing, screw and nuts stainless steel.

The sprocket can be moved on the screw and thus be aligned with the chain. It is locked in the desired position with the nuts. The permanently lubricated 2-Z bearings are sealed on both sides and guarantee perfect running of the sprocket.

Temperature range: -20° to +120°C.

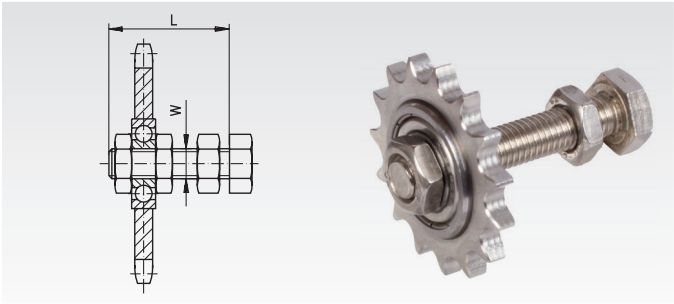

Ordering Details: e.g.: Product No. 140 995 01, Sprocket Set for Chain Tensioner 06 B-1

Product No.	Matching Tensioning Element Size	DIN ISO	Number of Teeth	Pitch Ø mm	L mm	W mm	Weight kg
140 995 01	1 and 2	06 B - 1	15	45,81	55	M10	0,08
140 995 05	1 and 2	08 B - 1	15	61,08	55	M10	0,20
140 995 06	3	10 B - 1	15	76,36	80	M12	0,30
140 995 07	3	12 B - 1	15	91,63	80	M12	0,51
140 995 08	4	16 B - 1	13	106,14	100	M20	0,95

Chain Tensioners SPANN-BOX® Size 0, for Roller Chains DIN ISO 606 (ex DIN 8187)

Material: Housing from thermoplast.
Chain rider from low pressure polyethylene PE-UHMW.
Screws and spring from stainless steel.

These small, ready-to install tensioners enable noise reduction and wear reduction at chain drives.

- With spiral, linear spring. On choice two tensioning forces.
- With colored wear-off indicator: Green: o.k. Yellow: still o.k. Red: Tensioning force too low (below 32N or 60N).
- Usable travel up to the end of the yellow range: About 32mm. Total travel about 40mm.
- Interchangeable with similar parts of other suppliers.

Temperature range: -20°C to +60°C (short time up to +80°C).

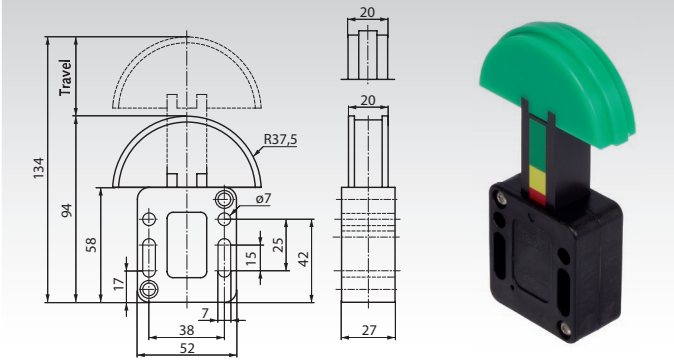

Ordering Details: e.g.: Product No. 140 401 01, Spann-Box Size 0, low Tensioning Force, 06 B-1

SPANN-BOX® Size 0 with low Tensioning Force

Product No.	DIN ISO	Pitch Inch	Tens. Force N	Weight g
140 401 01	≤ 06 B-1	3/8 x 7/32"	58 - 32	130
140 401 05*	08 B-1	1/2 x 5/16"	58 - 32	130
140 401 05*	10 B-1	5/8 x 3/8"	58 - 32	135
140 401 07	12 B-1	3/4 x 7/16"	58 - 32	135
140 401 21	06 B-2	3/8 x 7/32"	58 - 32	130
140 401 25	08 B-2	1/2 x 5/16"	58 - 32	130
140 401 26	10 B-2	5/8 x 3/8"	58 - 32	135

SPANN-BOX® Size 0 with high Tensioning Force

Product No.	DIN ISO	Pitch Inch	Tens. Force N	Weight g
140 402 01	≤ 06 B-1	3/8 x 7/32"	132 - 60	130
140 402 05*	08 B-1	1/2 x 5/16"	132 - 60	130
140 402 05*	10 B-1	5/8 x 3/8"	132 - 60	135
140 402 07	12 B-1	3/4 x 7/16"	132 - 60	135
140 402 21	06 B-2	3/8 x 7/32"	132 - 60	130
140 402 25	08 B-2	1/2 x 5/16"	132 - 60	130
140 402 26	10 B-2	5/8 x 3/8"	132 - 60	135

* This size fits 08 B-1 and 10 B-1.

Mounting of SPANN-BOX® Size 0

At front- and backside, there is a small hole for a locking pin (pin is included at the bottom of the housing). With this pin, the tensioner can be locked at maximum force for easy mounting. Recommendation: Mounting on slack side. The chain should be in contact with several links. To reach a sufficient contact angle, it may be useful to mount an idler wheel (e.g. KSP or KSP-R) near by the tensioner.

Operating Instructions at www.maedler.de in the section Downloads

Technical Note to Chain Tensioners SPANN-BOX® and SPANN-BOY®

Function: These tensioners are powered by linear spiral springs. These elastic tensioners reduce the chain slack and compensate the elongation of chains.

Temperature range: The standard versions are suitable for -20°C to +60°C (short time up to +80°C). Special versions are available on request for temperatures down to -40°C or up to +200°C.

Determination of tensioning force: The tensioners SPANN-BOX® size 0 can be ordered with two different tensioning forces. At SPANN-BOX® size 1 and SPANN-BOY® TS, the tensioning force can get adjusted at different amounts. The weight of the loose chain slack should not be greater than the half of the maximum tensioning force.

Mounting: The tensioner should be placed at the loose chain slack, near by the driving wheel. For low wear-off, several links should be in contact with the chain rider. To reach a sufficient contact angle, it may be useful to mount an idler wheel (e.g. KSP or KSP-R) near by the tensioner. For easy mounting, all tensioners can get locked at maximum tensioning force. After mounting, the tensioners must get unlocked.

Maintenance: At all tensioners, the colored wear-off indicator must be checked periodically. The time of period depends on the operating conditions of the chain drive. When the red marking can be seen, the tensioning force is too low. Then, after locking the tensioner at maximum spring force and loosing the mounting screws, the tensioner can get re-adjusted, closer to the chain. Slot holes allow a re-adjustment in a wide range. When the chain elonguation exceeds 3 %, the chain and chain wheels should be replaced. If the chain rider is worn, also the complete tensioner should be replaced.

Chain Tensioners SPANN-BOX® Size 1, for Roller Chains DIN ISO 606 (ex DIN 8187)

Material: Housing from steel, zinc plated, black lackered.
Chain rider from low pressure polyethylene PE-UHMW.
Material Version Stainless: Housing from stainless steel. STAINLESS

These ready-to-install tensioners enable noise reduction and wear reduction at chain drives.

- With three springs. On choice: Two tensioning force versions. At both versions, three different forces can get activated.
- With colored wear-off indicator: Green: o.k. Yellow: still o.k. Red: Tensioning force too low.
- Usable travel up to the end of the yellow range: About 32mm. Total travel about 40mm.
- Interchangeable with similar parts of other suppliers.

Temperature range: -20°C to +60°C (short time up to +80°C).

Ordering Details: e.g.: Product No. 140 403 01, Spann-Box Size 1, Short, Low Force, 06 B-1

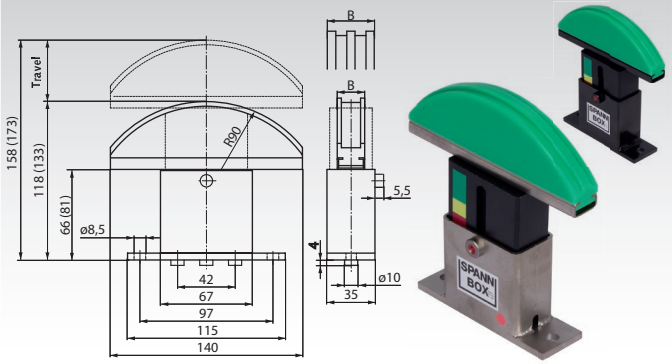

SPANN-BOX® Size 1, Short, Low Force

Product No.	DIN ISO	Pitch Inch	B mm	H mm	Weight g
140 403 01	≤06 B-1	3/8 x 7/32"	20	118	670
140 403 05	08 B-1	1/2 x 5/16"	20	118	670
140 403 06	10 B-1	5/8 x 3/8"	20	118	670
140 403 07	12 B-1	3/4 x 7/16"	20	118	670
140 403 08	16 B-1	1" x 17,02	20	118	670
140 403 09	20 B-1	1 1/4 x 3/4"	20	118	670
140 403 21	06 B-2	3/8 x 7/32"	20	118	670
140 403 25	08 B-2	1/2 x 5/16"	20	118	670
140 403 26	10 B-2	5/8 x 3/8"	25	118	750
140 403 27	12 B-2	3/4 x 7/16"	30	118	750
140 403 28	16 B-2	1" x 17,02	45	118	820
140 403 31	06 B-3	3/8 x 7/32"	25	118	740
140 403 35	08 B-3	1/2 x 5/16"	30	118	750
140 403 36	10 B-3	5/8 x 3/8"	40	118	790
140 403 37	12 B-3	3/4 x 7/16"	45	118	810

SPANN-BOX® Size 1, Short, High Force

Product No.	DIN ISO	Pitch Inch	B mm	H mm	Weight g
140 404 01	≤06 B-1	3/8 x 7/32"	20	118	670
140 404 05	08 B-1	1/2 x 5/16"	20	118	670
140 404 06	10 B-1	5/8 x 3/8"	20	118	670
140 404 07	12 B-1	3/4 x 7/16"	20	118	670
140 404 08	16 B-1	1" x 17,02	20	118	670
140 404 09	20 B-1	1 1/4 x 3/4"	20	118	670
140 404 21	06 B-2	3/8 x 7/32"	20	118	670
140 404 25	08 B-2	1/2 x 5/16"	20	118	670
140 404 26	10 B-2	5/8 x 3/8"	25	118	750
140 404 27	12 B-2	3/4 x 7/16"	30	118	750
140 404 28	16 B-2	1" x 17,02	45	118	820
140 404 31	06 B-3	3/8 x 7/32"	25	118	740
140 404 35	08 B-3	1/2 x 5/16"	30	118	750
140 404 36	10 B-3	5/8 x 3/8"	40	118	790
140 404 37	12 B-3	3/4 x 7/16"	45	118	810

SPANN-BOX® Size 1, Short, High Force, Stainless

Product No. STAINLESS	DIN ISO	Pitch Inch	B mm	H mm	Weight g
140 405 01	≤06 B-1	3/8 x 7/32"	20	118	670
140 405 05	08 B-1	1/2 x 5/16"	20	118	670
140 405 06	10 B-1	5/8 x 3/8"	20	118	670
140 405 07	12 B-1	3/4 x 7/16"	20	118	670
140 405 08	16 B-1	1" x 17,02	20	118	670
140 405 09	20 B-1	1 1/4 x 3/4"	20	118	670
140 405 21	06 B-2	3/8 x 7/32"	20	118	670
140 405 25	08 B-2	1/2 x 5/16"	20	118	670
140 405 26	10 B-2	5/8 x 3/8"	25	118	750
140 405 27	12 B-2	3/4 x 7/16"	30	118	750
140 405 28	16 B-2	1" x 17,02	45	118	820
140 405 31	06 B-3	3/8 x 7/32"	25	118	740
140 405 35	08 B-3	1/2 x 5/16"	30	118	750
140 405 36	10 B-3	5/8 x 3/8"	40	118	790
140 405 37	12 B-3	3/4 x 7/16"	45	118	810

SPANN-BOX® Size 1, Long, High Force

Product No.	DIN ISO	Pitch Inch	B mm	H mm	Weight g
140 406 01	≤06 B-1	3/8 x 7/32"	20	133	740
140 406 05	08 B-1	1/2 x 5/16"	20	133	740
140 406 06	10 B-1	5/8 x 3/8"	20	133	740
140 406 07	12 B-1	3/4 x 7/16"	20	133	740
140 406 08	16 B-1	1" x 17,02	20	133	740
140 406 09	20 B-1	1 1/4 x 3/4"	20	133	740
140 406 21	06 B-2	3/8 x 7/32"	20	133	810
140 406 25	08 B-2	1/2 x 5/16"	20	133	810
140 406 26	10 B-2	5/8 x 3/8"	25	133	810
140 406 27	12 B-2	3/4 x 7/16"	30	133	810
140 406 28	16 B-2	1" x 17,02	45	133	890
140 406 31	06 B-3	3/8 x 7/32"	25	133	820
140 406 35	08 B-3	1/2 x 5/16"	30	133	820
140 406 36	10 B-3	5/8 x 3/8"	40	133	820
140 406 37	12 B-3	3/4 x 7/16"	45	133	890

SPANN-BOX® Size 1, Long, High Force, Stainless

Product No. STAINLESS	DIN ISO	Pitch Inch	B mm	H mm	Weight g
140 407 01	≤06 B-1	3/8 x 7/32"	20	133	740
140 407 05	08 B-1	1/2 x 5/16"	20	133	740
140 407 06	10 B-1	5/8 x 3/8"	20	133	740
140 407 07	12 B-1	3/4 x 7/16"	20	133	740
140 407 08	16 B-1	1" x 17,02	20	133	740
140 407 09	20 B-1	1 1/4 x 3/4"	20	133	740
140 407 21	06 B-2	3/8 x 7/32"	20	133	810
140 407 25	08 B-2	1/2 x 5/16"	20	133	810
140 407 26	10 B-2	5/8 x 3/8"	25	133	810
140 407 27	12 B-2	3/4 x 7/16"	30	133	810
140 407 28	16 B-2	1" x 17,02	45	133	890
140 407 31	06 B-3	3/8 x 7/32"	25	133	820
140 407 35	08 B-3	1/2 x 5/16"	30	133	820
140 407 36	10 B-3	5/8 x 3/8"	40	133	820
140 407 37	12 B-3	3/4 x 7/16"	45	133	890

Adjustable Tensioning Forces:

On choice, there are two versions, with low tensioning force or with high tensioning force. Both versions have three springs, which can get activated independent from each other to reach three different tensioning forces:

Version with low tensioning force:

1 spring activated: 58 - 32 N.
2 springs activated: 116 - 64 N.
3 springs activated: 174 - 96 N.

Version with high tensioning force:

1 spring activated: 132 - 60 N.
2 springs activated: 264 - 120 N.
3 springs activated: 396 - 180 N.

Operating Instructions at www.maedler.de in the section Downloads

Chain Tensioners SPANN-BOY® TS, for Roller Chains DIN ISO 606 (ex DIN 8187)

Material: Housing from steel, zinc plated, black lackered.
Chain rider from low pressure polyethylene PE-UHMW.
Material Version Stainless: Housing from stainless steel.

These very low, ready-to-install tensioners enable noise reduction and wear reduction at chain drives.

- Needed space below chain only 40mm.
- With two springs of different force, which can get activated separately or together. So it is possible to adjust three different tensioning forces.
- Usable travel about 40mm.
- Interchangeable with similar parts of other suppliers.

Temperature range: -20°C to +60°C (short time up to +80°C).

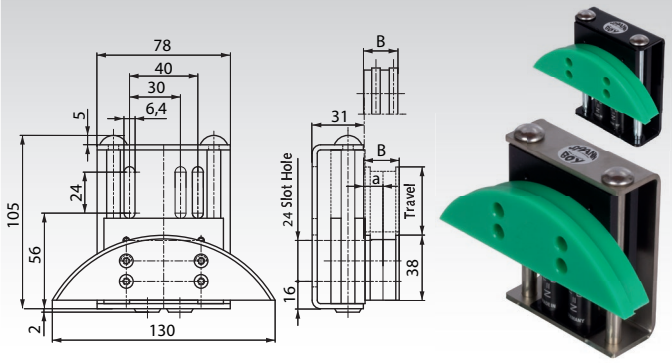

Ordering Details: e.g.: Product No. 140 408 01, Spann-Boy TS, 06 B-1

SPANN-BOY® TS

Product No.	DIN ISO	Pitch Inch	a mm	B mm	Weight g
140 408 01	≤06 B-1	3/8 x 7/32“	10,0	20	460
140 408 05	08 B-1	1/2 x 5/16“	16,5	20	460
140 408 06	10 B-1	5/8 x 3/8“	15,6	20	460
140 408 07	12 B-1	3/4 x 7/16“	14,8	20	460
140 408 21	06 B-2	3/8 x 7/32“	7,5	20	460
140 408 25	08 B-2	1/2 x 5/16“	15,2	32	460
140 408 26	10 B-2	5/8 x 3/8“	11,3	32	500
140 408 30	05 B-3	8mm x 3mm	7,4	20	480
140 408 31	06 B-3	3/8 x 7/32“	9,4	32	480

SPANN-BOY® TS, Stainless

Product No. STAINLESS	DIN ISO	Pitch Inch	a mm	B mm	Weight g
140 409 01	≤06 B-1	3/8 x 7/32“	10,0	20	460
140 409 05	08 B-1	1/2 x 5/16“	16,5	20	460
140 409 06	10 B-1	5/8 x 3/8“	15,6	20	460
140 409 07	12 B-1	3/4 x 7/16“	14,8	20	460
140 409 21	06 B-2	3/8 x 7/32“	7,5	20	460
140 409 25	08 B-2	1/2 x 5/16“	15,2	32	460
140 409 26	10 B-2	5/8 x 3/8“	11,3	32	500
140 409 30	05 B-3	8mm x 3mm	7,4	20	480
140 409 31	06 B-3	3/8 x 7/32“	9,4	32	480

Adjustable Tensioning Forces:

The SPANN-BOY® TS has two different springs: one with low force and one with high force. These springs gan get activated separately or together. So it is possible to adjust three different tensioning forces:

Only the low-force spring activated: 58 - 32 N.
Only the high-force spring activated: 132 - 60 N.
Both springs together activated: 190 - 96 N.

Operating Instructions at www.maedler.de in the section Downloads

Chain Tensioners for Single-Strand Roller Chains DIN ISO 606 (ex DIN 8187)

Material: Housing sintered steel or grey cast iron GG20, lever St52, sprocket made from steel.

This tensioning element, a continually-tensioning torsion element, prolongs the service life of chain and belt drives by at least 30%, and radically reduces maintenance and repair work. The unique operating principle of this spring offers a long tensioning distance, especially as the lever can be pre-tensioned by up to 30° in both directions. The permanent torsion force does not only automatically compensate the chain elongation, the rubber mounted element also dampens vibrations and shocks in the entire drive. Other advantages: chain track adjustable, rubber suspension, adjustable at an angle of 360°, tensioning pressure steplessly adjustable from "normal" to " hard". Can be used for both tensioning directions. Temperature range: -20° to +80°C.

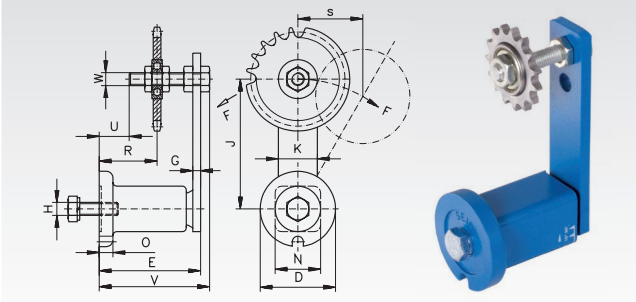

Ordering Details: e.g.: Product No. 140 802 00, Tensioner and 140 501 01, Sprocket

DIN ISO	Product No. Tensioning Element	Product No. Single Sprocket	No. of Teeth	Pitch Ø mm	max. Tensioning Force N	D mm	E mm	H mm	J mm	N mm	R mm	S max. mm	U mm	V mm	W mm	Weight kg
06 B - 1	**140 802 00**	**140 501 01**	15	45,81	0- 350	58	79 $^{+1,5}_{-0,5}$	M10	100	35	34-55	50	23	85	M10	0,75
081	**140 802 16**	**140 502 01**	18	73,14	0- 350	58	79 $^{+1,5}_{-0,5}$	M10	100	35	40-48	50	23	88	M16	0,95
083	**140 802 16**	**140 503 01**	18	73,14	0- 350	58	79 $^{+1,5}_{-0,5}$	M10	100	35	40-48	50	23	88	M16	0,96
08 B - 1	**140 802 00**	**140 505 01**	15	61,08	0- 350	58	79 $^{+1,5}_{-0,5}$	M10	100	35	34-55	50	23	85	M10	0,80
10 B - 1	**140 803 00**	**140 506 01**	15	76,36	0- 800	78	108 $^{+2}_{-0,5}$	M12	130	52	42-80	65	27	115	M12	2,05
12 B - 1	**140 803 00**	**140 507 01**	15	91,63	0- 800	78	108 $^{+2}_{-0,5}$	M12	130	52	42-80	65	27	115	M12	2,25
16 B - 1	**140 804 00**	**140 508 01**	13	106,14	0- 1500	95	140 $^{+2}_{-0,5}$	M16	175	66	60-100	87,5	40	153	M20	4,80

Chain Tensioners for Double-Strand Roller Chains DIN ISO 606 (ex DIN 8187)

Material: Housing sintered steel or grey cast iron GG20, lever St52, sprocket made from steel.

This tensioning element, a continually-tensioning torsion element, prolongs the service life of chain and belt drives by at least 30%, and radically reduces maintenance and repair work. The unique operating principle of this spring offers a long tensioning distance, especially as the lever can be pre-tensioned by up to 30° in both directions. The permanent torsion force does not only automatically compensate the chain elongation, the rubber mounted element also dampens vibrations and shocks in the entire drive. Other advantages: chain track adjustable, rubber suspension, adjustable at an angle of 360°, tensioning pressure steplessly adjustable from "normal" to " hard". Can be used for both tensioning directions. Temperature range: -20° to +80°C.

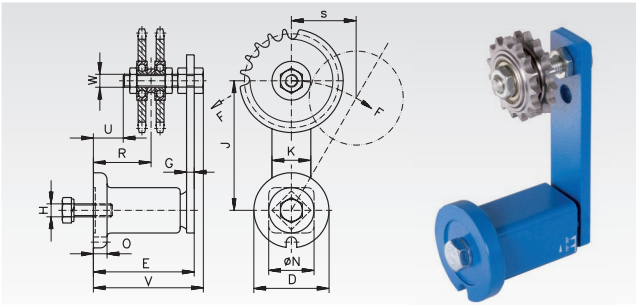

Ordering Details: e.g.: Product No. 140 802 00, Tensioner and 140 521 01, Sprocket

DIN ISO	Product No. Tensioning Element	Product No. Double Sprocket	No. of Teeth	Pitch Ø mm	max. Tensioning Force N	D mm	E mm	H mm	J mm	N mm	R mm	S max. mm	U mm	V mm	W mm	Weight kg
06 B - 2	**140 802 00**	**140 521 01**	15	45,81	0- 350	58	79 $^{+1,5}_{-0,5}$	M10	100	35	39-50	50	23	85	M10	0,80
08 B - 2	**140 802 00**	**140 525 01**	15	61,08	0- 350	58	79 $^{+1,5}_{-0,5}$	M10	100	35	41-48	50	23	85	M10	0,80
10 B - 2	**140 803 00**	**140 526 01**	15	76,36	0- 800	78	108 $^{+2}_{-0,5}$	M12	130	52	50-71	65	27	115	M12	2,30
12 B - 2	**140 803 00**	**140 527 01**	15	91,63	0- 800	78	108 $^{+2}_{-0,5}$	M12	130	52	51-70	65	27	115	M12	2,75
16 B - 2	**140 804 00**	**140 528 01**	13	106,14	0- 1500	95	140 $^{+2}_{-0,5}$	M16	175	66	56-85	87,5	20	153	M20	5,65

Chain Tensioners for Triple-Strand Roller Chains DIN ISO 606 (ex DIN 8187)

Material: Housing sintered steel or grey cast iron GG20, lever St52, sprocket made from steel.

This tensioning element, a continually-tensioning torsion element, prolongs the service life of chain and belt drives by at least 30%, and radically reduces maintenance and repair work. The unique operating principle of this spring offers a long tensioning distance, especially as the lever can be pre-tensioned by up to 30° in both directions. The permanent torsion force does not only automatically compensate the chain elongation, the rubber mounted element also dampens vibrations and shocks in the entire drive. Other advantages: chain track adjustable, rubber suspension, adjustable at an angle of 360°, tensioning pressure steplessly adjustable from "normal" to " hard". Can be used for both tensioning directions. Temperature range: -20° to +80°C.

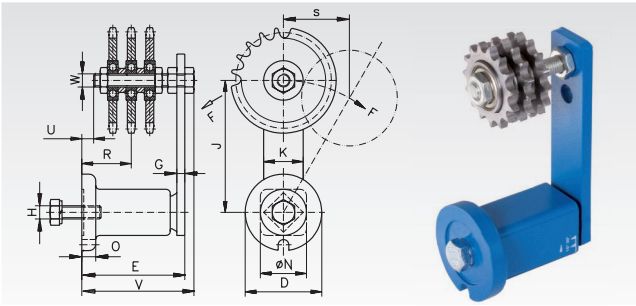

Ordering Details: e.g.: Product No. 140 802 00, Tensioner and 140 531 01, Sprocket

DIN ISO	Product No. Tensioning Element	Product No. Triple Sprocket	No. of Teeth	Pitch Ø mm	max. Tensioning Force N	D mm	E mm	H mm	J mm	N mm	R mm	S max. mm	U mm	V mm	W mm	Weight kg
06 B - 3	**140 802 00**	**140 531 01**	15	45,81	0- 350	58	79 $^{+1,5}_{-0,5}$	M10	100	35	25-45	50	6	85	M10	0,90
08 B - 3	**140 802 12**	**140 535 01**	15	61,08	0- 350	58	79 $^{+1,5}_{-0,5}$	M10	100	35	23-47	50	6	85	M12	0,90
10 B - 3	**140 803 00**	**140 536 01**	15	76,36	0- 800	78	108 $^{+2}_{-0,5}$	M12	130	52	40-64	65	15	115	M12	3,25
12 B - 3	**140 804 00**	**140 537 01**	15	91,63	0- 1500	95	140 $^{+2}_{-0,5}$	M16	175	66	56-80	87,5	30	153	M20	6,50

Sprocket Sets for Chain Tensioners Single

Material: Steel St40/50. Screw zinc-plated steel.

The sprocket can be moved on the screw and thus be aligned with the chain. It is locked in the desired position with the nuts. The permanently lubricated 2-Z bearings are sealed on both sides and guarantee perfect running of the sprocket.

Temperature range: -20° to +120°C.

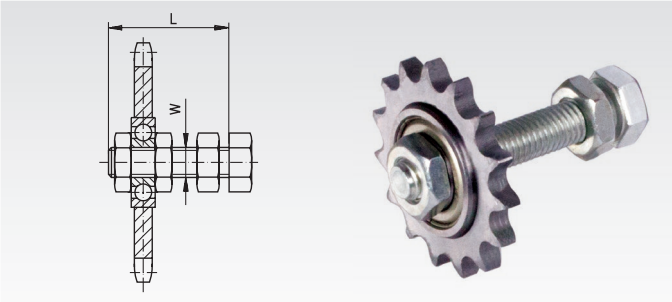

Ordering Details: e.g.: Product No. 140 501 01, Sprocket Set for Chain Tensioner Size 1

Product No.	Matching Tensioning Element Size	DIN ISO	No. of Teeth	Pitch Ø mm	L mm	W mm	Weight kg
140 501 01	1 and 2	06 B - 1	15	45,81	55	M10	0,08
140 502 01*	1[1)] and 2[2)]	081	18	73,14	55	M16[3)]	0,19
140 503 01*	1[1)] and 2[2)]	083	18	73,14	55	M16[3)]	0,21
140 505 01	1 and 2	08 B - 1	15	61,08	55	M10	0,20
140 506 01	3	10 B - 1	15	76,36	80	M12	0,30
140 507 01	3	12 B - 1	15	91,63	80	M12	0,51
140 508 01	4	16 B - 1	13	106,14	100	M20	0,95

[1)] Tensioning element bore needs to be drilled out. [2)] Matching Product No. 140 802 16. [3)] With special ball bearing, length of inner ring 18.3mm.

Sprocket Sets for Chain Tensioners, Double

Material: Steel St40/50. Screw zinc-plated steel.

The sprocket can be moved on the screw and thus be aligned with the chain. It is locked in the desired position with the nuts. The permanently lubricated 2-Z bearings are sealed on both sides and guarantee perfect running of the sprocket.

Accurate-to-size spacers guarantee perfect meshing of teeth and sprocket.

Temperature range: -20° to +120°C.

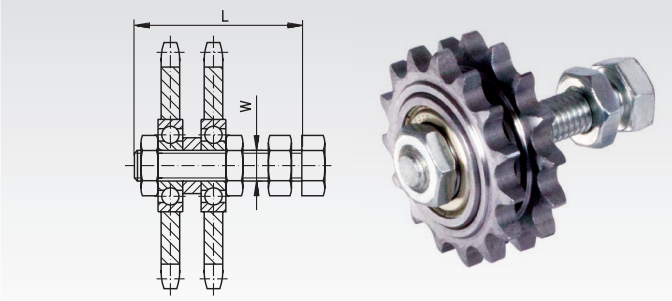

Ordering Details: e.g.: Product No. 140 521 01, Sprocket Set for Chain Tensioner Size 1

Product No.	Matching Tensioning Element Size	DIN ISO	No. of Teeth	Pitch Ø mm	L mm	W mm	Weight kg
140 521 01	1 and 2	06 B - 2	15	45,81	55	M10	0,15
140 525 01	1 and 2	08 B - 2	15	61,08	70	M10	0,40
140 526 01	3	10 B - 2	15	76,36	80	M12	0,60
140 527 01	3	12 B - 2	15	91,63	80	M12	1,00
140 528 01	4	16 B - 2	13	106,14	120	M20	1,90

Sprocket Sets for Chain Tensioners, Triple

Material: Steel St40/50. Screw zinc-plated steel.

The sprocket can be moved on the screw and thus be aligned with the chain. It is locked in the desired position with the nuts. The permanently lubricated 2-Z bearings are sealed on both sides and guarantee perfect running of the sprocket.

Accurate-to-size spacers guarantee perfect meshing of teeth and sprocket.

Temperature range: -20° to +120°C.

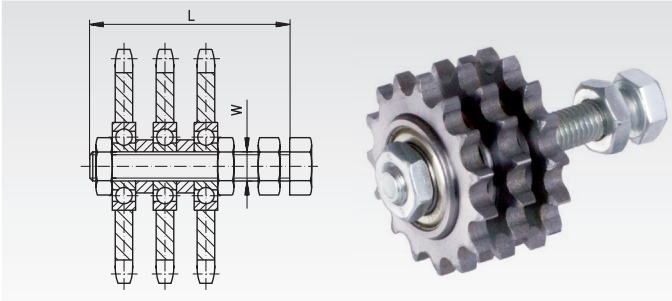

Ordering Details: e.g.: Product No. 140 531 01, Sprocket Set for Chain Tensioner Size 2

Product No.	Matching Tensioning Element Size	DIN ISO	No. of Teeth	Pitch Ø mm	L mm	W mm	Weight kg
140 531 01	2	06 B - 3	15	45,81	70	M10	0,25
140 535 01	2* and 3	08 B - 3	15	61,08	80	M12	0,50
140 536 01	3	10 B - 3	15	76,36	80	M12	0,95
140 537 01	4	12 B - 3	15	91,63	120	M20	1,50

* Matching tensioning element Product No. 140 802 12.

Chain Rider Sets

Material: Plastic POM. Screw zinc-plated steel.

To be mounted on the suitable tensioning element to create a ready-to-mount, cost-efficient chain tensioner. The shape of the rider, made from high-grade, friction resistant, industrial plastic, means the rider can be used on both rider sides and the large radius guarantees quiet operation. The maximum chain speed must not exceed 1.5 m/sec. Temperature range: -20° to +80°C.

Tensioning Element has to be ordered separately.

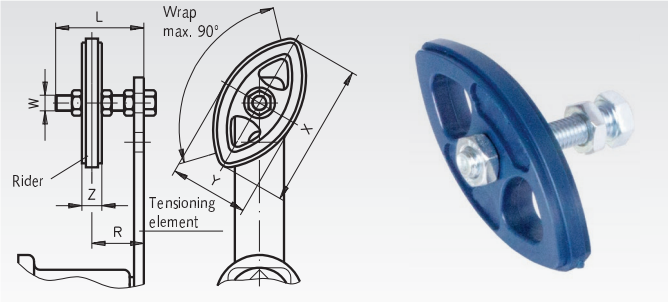

Ordering Details: e.g.: Product No. 140 851 00 Chain Rider Set 06 B-1

Product No.	Suitable for Tensioning Element Size	DIN ISO	W mm	L mm	X mm	Y mm	Z mm	Adjustment Range R mm	Weight kg
140 851 00	0	06 B - 1	M8	45	74	40	10,2	19 - 34	0,05
140 855 00	1	08 B - 1	M10	55	96	50	13,9	23 - 41	0,10
140 856 00	2	10 B - 1	M10	55	126	65	16,6	24 - 39	0,12
140 857 00	3	12 B - 1	M12	80	148	74	19,5	30 - 61	0,18

Tensioning Elements in Standard Version

Material: Housing up to Ø 78 mm made from sintered steel, over Ø 78 mm made from grey cast iron GG20, lever made from St52.
Can be used for tensioning all common kinds of chain and belt drives. The elastomeric inserts are based on highly-elastic natural rubber with a good shape memory and are designed for applications in temperatures from -40° to +80°C
The tensioning elements are painted blue and supplied with a zinc-plated screw and spring washer. Can be used for both tensioning directions. Temperature range: -40° to +80°C.

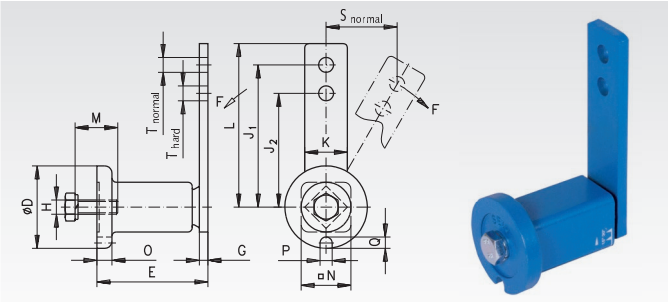

Ordering Details: e.g.: Product No. 140 800 00, Tensioning Element Ø 35 mm

Product No.	Size	F max. normal N	F max. hard N	s max. normal mm	s max. hard mm	D mm	E mm	G mm	H mm	J_1 mm	J_2 mm	K mm	L mm	M mm	N mm	O mm	P mm	Q mm	T mm	M_A Nm	Weight kg
140 800 00	0	80	106	40	30	35	$51^{+1,0}_{-0,5}$	5	M6	80	60	20	90	20	22	6	8	5	8,5	10	0,2
140 801 00	1	135	168	50	40	45	$64^{+1,0}_{-0,5}$	5	M8	100	80	25	112,5	25	30	8	8,5	6	10,5	25	0,4
140 802 00	2	350	437	50	40	58	$79^{+1,5}_{-0,5}$	7	M10	100	80	30	115	30	35	10,5	8,5	8	10,5	49	0,6
140 802 12	2	350	437	50	40	58	$79^{+1,5}_{-0,5}$	7	M10	100	80	30	115	30	35	10,5	8,5	8	12	49	0,6
140 802 16	2	350	437	50	40	58	$79^{+1,5}_{-0,5}$	7	M10	100	80	30	115	30	35	10,5	8,5	8	16	49	0,6
140 803 00	3	800	1040	65	50	78	$108^{+2}_{-0,5}$	8	M12	130	100	50	155	40	52	15	10,5	10	12,5	86	1,7
140 804 00	4	1500	1875	87,5	70	95	$140^{+2}_{-0,5}$	10	M16	175	140	60	205	40	66	15	12,5	12	20,5	210	3,55

Tensioning Elements, Zinc Plated and Oil Resistant

Material: Casing made from sintered steel or grey cast iron GG20, lever made from St52.

The design of these tensioning elements is identical to the standard version, but they are zinc plated and the synthetic spring elements are resistant to mineral oils. These components are especially suited for "outdoor" applications, e.g. for construction machinery or for use inside the oilbath of a gearbox. The tensioning elements are marked with a yellow dot on the lever. Can be used for both tensioning directions.
Temperature range: -40° to +120°C.

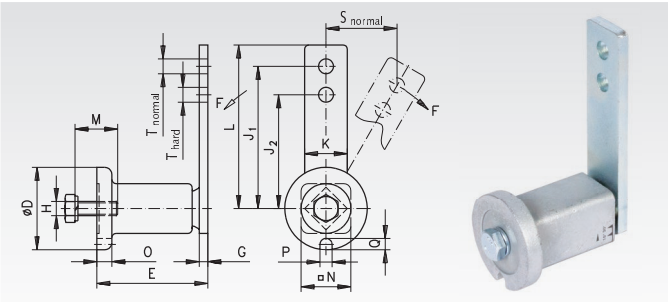

Ordering Details: e.g.: Product No. 140 800 03, Tensioning Element Ø 35 mm

Product No.	Size	F max. normal N	F max. hard N	s max. normal mm	s max. hard mm	D mm	E mm	G mm	H mm	J_1 mm	J_2 mm	K mm	L mm	M mm	N mm	O mm	P mm	Q mm	T mm	M_A Nm	Weight kg
140 800 03	0	80	106	40	30	35	$51^{+1,0}_{-0,5}$	5	M6	80	60	20	90	20	22	6	8	5	8,5	10	0,2
140 801 03	1	135	168	50	40	45	$64^{+1,0}_{-0,5}$	5	M8	100	80	25	112,5	25	30	8	8,5	6	10,5	25	0,4
140 802 03	2	350	437	50	40	58	$79^{+1,5}_{-0,5}$	7	M10	100	80	30	115	30	35	10,5	8,5	8	10,5	49	0,6
140 803 03	3	800	1040	65	50	78	$108^{+2}_{-0,5}$	8	M12	130	100	50	155	40	52	15	10,5	10	12,5	86	1,7
140 804 03	4	1500	1875	87,5	70	95	$140^{+2}_{-0,5}$	10	M16	175	140	60	205	40	66	15	12,5	12	20,5	210	3,55

Tensioning Elements with Front Mounting

Material: Housing up to Ø 78 mm made from sintered steel, over Ø 78 mm made from grey cast iron GG20, lever made from St52.

These tensioning elements are in general identical to the standard version. For easier mounting they are fixed from the lever side using an in-and-out screw. A thread has to be cut in the machine housing. The supplied screw is secured for transport with an O-Ring. Can be used for both tensioning directions. Temperature range: -40° to +80°C.

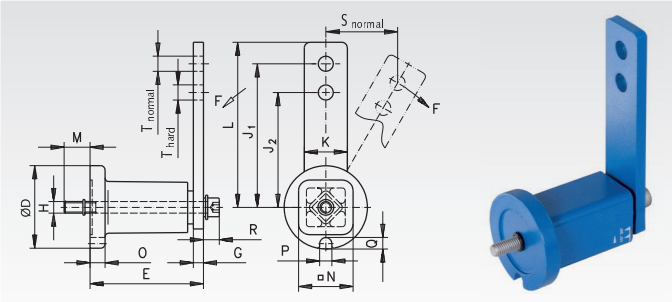

Ordering Details: e.g.: Product No. 140 801 07, Tensioning Element Ø 45 mm

Product No.	Size	F max. normal N	F max. hard N	s max. normal mm	s max. hard mm	D mm	E mm	G mm	H mm	J_1 mm	J_2 mm	K mm	L mm	M mm	N mm	O mm	P mm	Q mm	R mm	T mm	M_A Nm	Weight kg
140 801 07	1	135	168	50	40	45	$64^{+1,0}_{-0,5}$	5	M6	100	80	25	113	12,4	30	8	8,5	6	10	10,5	17	0,4
140 802 07	2	350	437	50	40	58	$79^{+1,5}_{-0,5}$	7	M8	100	80	30	115	18,9	35	10,5	8,5	8	12	10,5	41	0,65
140 803 07	3	800	1040	65	50	78	$108^{+2}_{-0,5}$	8	M10	130	100	50	155	17,5	52	15	11	10	16	12,5	83	1,85
140 804 07	4	1500	1875	87,5	70	95	$140^{+2}_{-0,5}$	10	M12	175	140	60	205	18,0	66	15	13	12	19	20,5	145	3,70

Tensioning Elements Stainless

Material: Stainless steel 1.4301 or 1.4308.

STAINLESS

The design of this tensioning element is identical to the standard version.
Temperature range: -40° to +80°C.

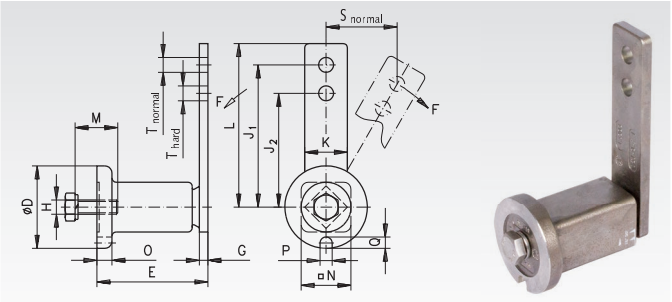

Ordering Details: e.g.: Product No. 140 998 01, Tensioning Element Ø 45 mm

Product No	Size	F max. normal N	F max. hard N	s max. normal mm	s max. hard mm	D mm	E mm	G mm	H mm	J_1 mm	J_2 mm	K mm	L mm	M mm	N mm	O mm	P mm	Q mm	T mm	M_A Nm	Weight kg
140 998 01	1	150	187,5	50	40	45	$64^{+1,0}_{-0,5}$	5	M8	100	80	25	112,5	25	30	8	8,5	6	10,5	25	0,35
140 998 02	2	400	500	50	40	58	$79^{+1,5}_{-0,5}$	7	M10	100	80	30	115	30	35	10,5	8,5	8	10,5	49	0,70
140 998 03	3	860	1118	65	50	78	$108^{+2}_{-0,5}$	8	M12	130	100	50	155	40	52	15	10,5	10	12,5	86	1,90
140 998 04	4	1500	1875	87,5	70	100	$140^{+2}_{-0,5}$	10	M16	175	140	70	205	40	70	15	12,5	12	20,5	210	4,30

Tensioning Elements „Boomerang“

Material: Housing sintered steel, lever St52.

These tensioning elements are used to compensate the slack in extremely long chain drives. The slack length passes in an S-shape through the supplied sprockets or pulleys so that the lever works as a compensator. This system thus offers a triple compensation of the slack compared to standard tensioners.

Application example:

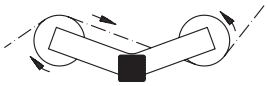

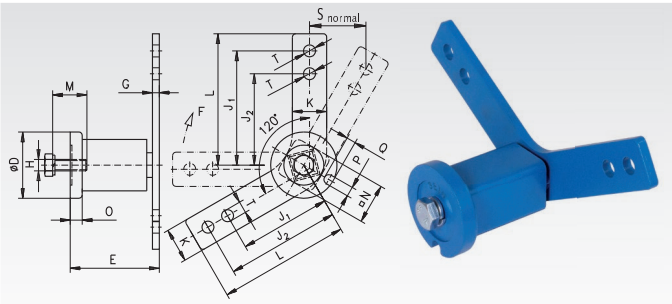

Ordering Details: e.g.: Product No. 140 802 09, Tensioning Element Ø 58 mm

Product No.	Size	F max. normal N	F max. hard N	s max. normal mm	s max. hard mm	D mm	E mm	G mm	H mm	J_1 mm	J_2 mm	K mm	L mm	M mm	N mm	O mm	P mm	Q mm	T mm	M_A Nm	Weight kg
140 802 09	2	175	215	50	40	58	$79^{+1,5}_{-0,5}$	6	M10	100	80	30	115	30	35	10,5	8,5	8	10,5	49	0,75
140 803 09	3	400	520	65	50	78	$108^{+2}_{-0,5}$	8	M12	130	100	50	155	40	52	15	11	10	12,5	86	2,10