INKOMA - GROUP

Accessories for screw jacks type SGT

ALBERT

Maschinenfabrik ALBERT GmbH
Technologiepark 2
A - 4851 Gampern - Austria

phone: +43/(0)7682-39080-10
fax: +43/(0)7682-39080-99
e-mail: office@albert.at
internet: www.ALBERT.at

We reserve the right to make technical changes.
2014-1-MP-OE-e © INKOMA-GROUP

Product description

Accessories for ALBERT-SGT screw jacks with trapezoidal or ball screw spindle

The comprehensive range of ALBERT accessories for screw jacks provides the designer with the means to achieve the best possible fit of the equipment to the application. All accessories are manufactured to the same exacting standards as the rest of the ALBERT product range.
In addition to this comprehensive programme, customer specific requirements are also catered for. Our engineers will be pleased to hear from you.

Special designs are available. Please enquire.

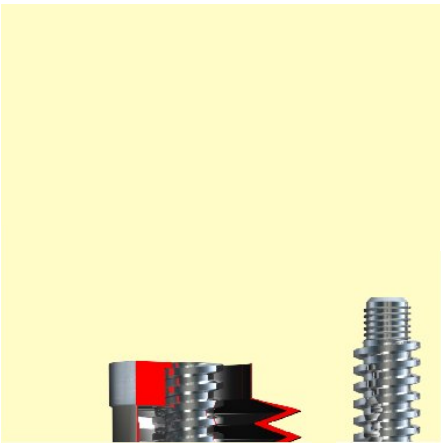

Accessories for version GO, GU (basic design)

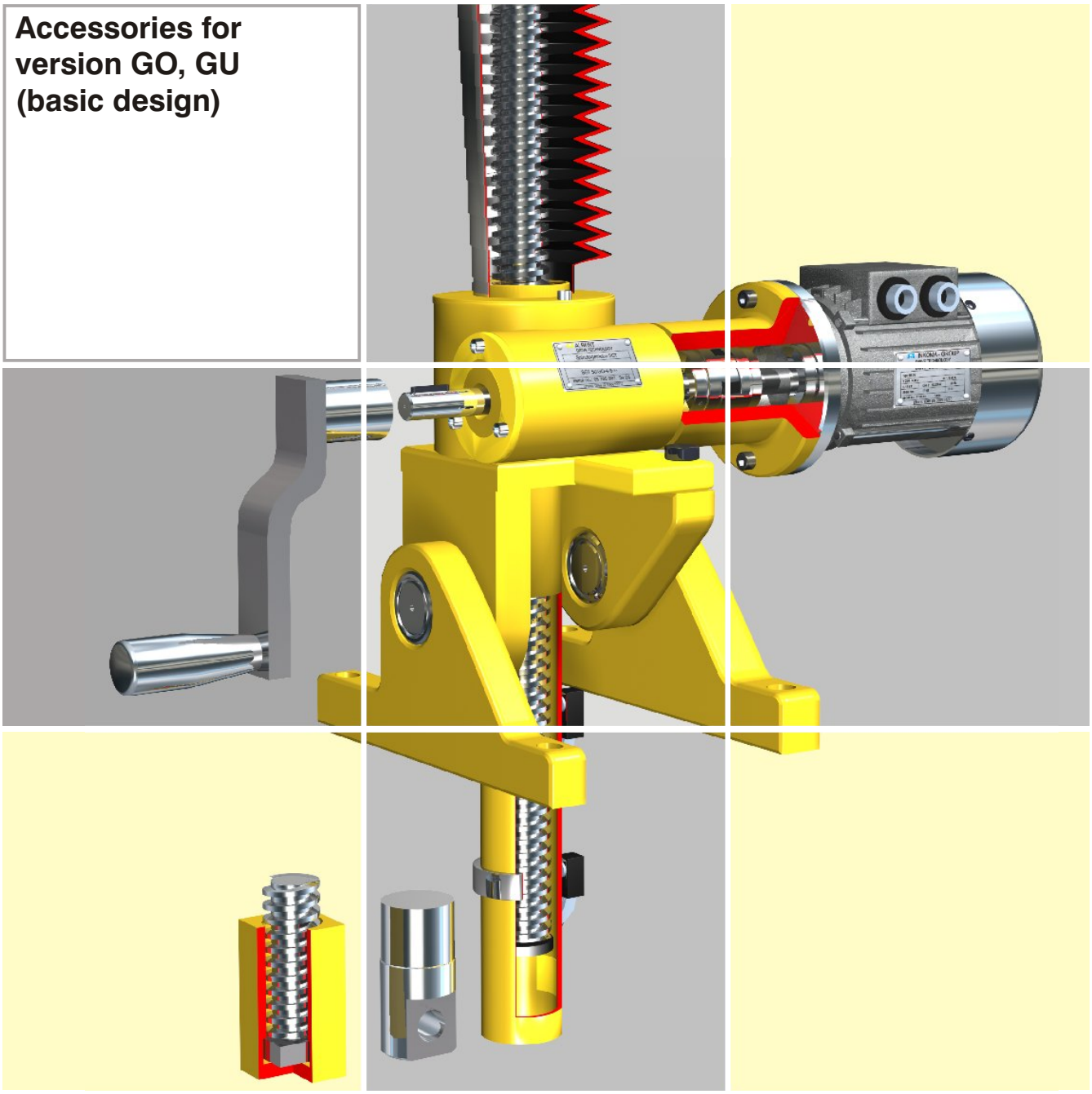

Product description

Accessories for ALBERT-SGT screw jacks with trapezoidal or ball screw spindle

The comprehensive range of ALBERT accessories for screw jacks provides the designer with the means to achieve the best possible fit of the equipment to the application. All accessories are manufactured to the same exacting standards as the rest of the ALBERT product range.
In addition to this comprehensive programme, customer specific requirements are also catered for. Our engineers will be pleased to hear from you.

Special designs are available. Please enquire.

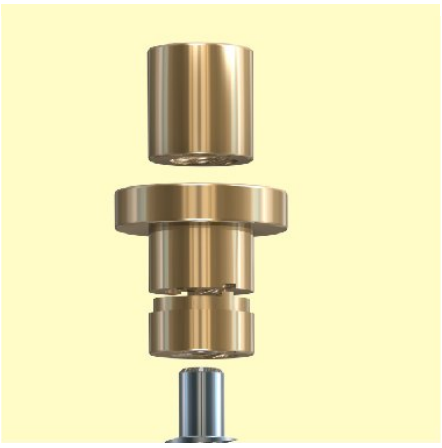

Accessories for version LO, LU (running nut design)

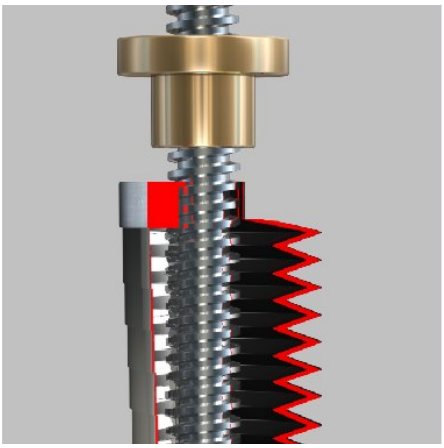

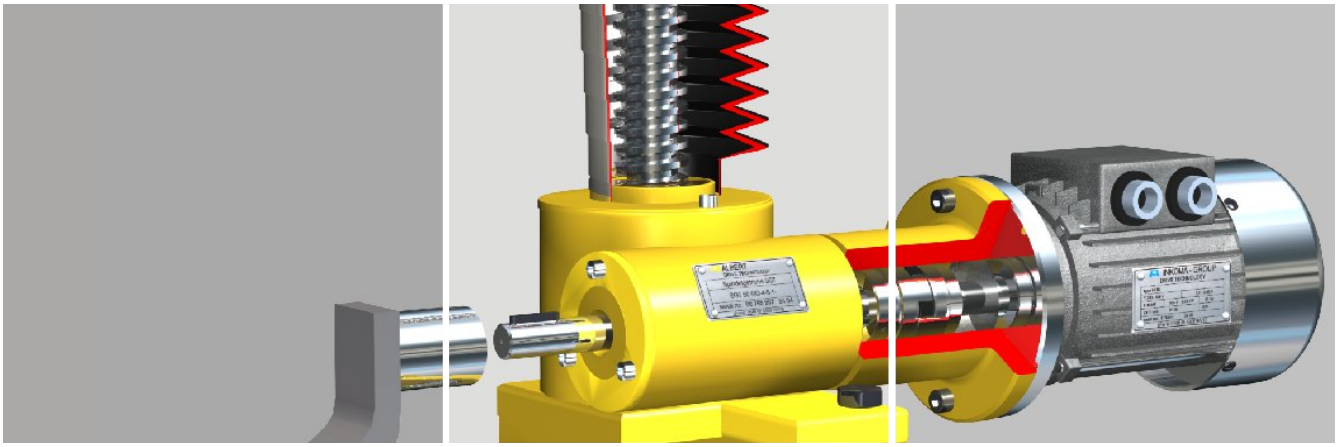

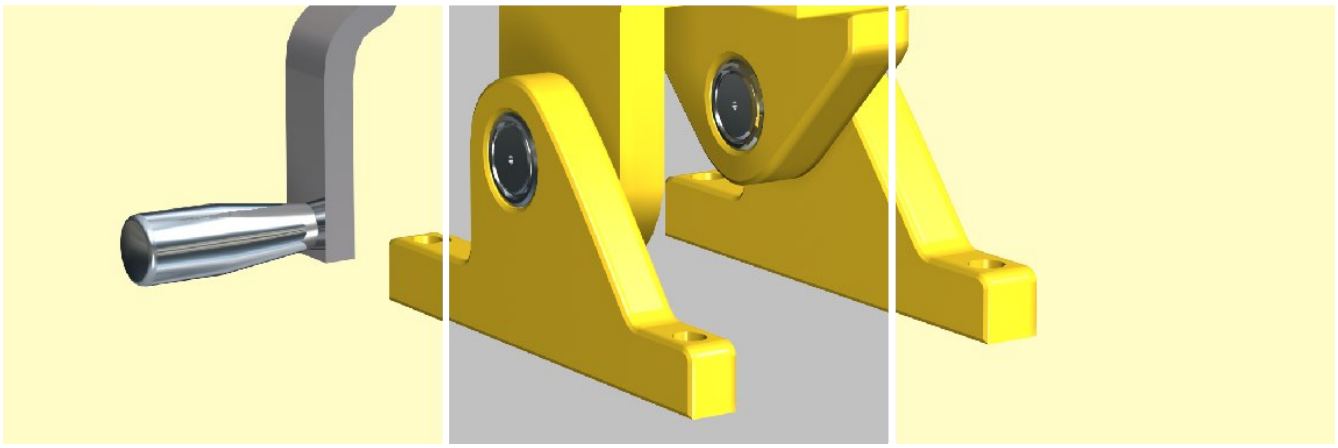

Contents list

Accessories for screw jacks type SGT - version LO, LU (running nut design)

Selection criteria for platform versions — page 69

summary of the most relevant information for screw jacks according to guide lines

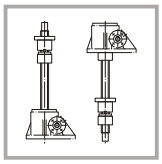

LFM Safety nut — page 70 - 71

for version LO,LU (running nut design)

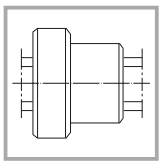

FMA Trapezoidal flanged nut — page 72 - 73

for standard applications

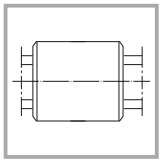

TMA Trapezoidal spindle nut — page 72 - 73

for applications where space is critical

Accessories for screw jacks type SGT - version GO, GU (basic design)

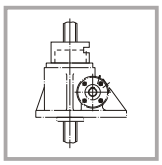

LFM-S Safety nut — page 70 - 71

for version GO, GU (basic design)

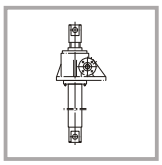

SE Clevis attachment — page 74 - 75

permits pivoting of the screw jack

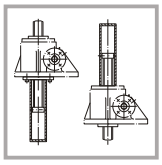
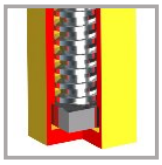

VK Square rotation preventer — page 74 - 75

prevents spindle rotating using a square tube

Accessories for all versions of SGT screw jacks

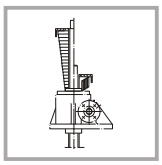

SFA Spiral protective sleeve — page 76

provide spindle protection

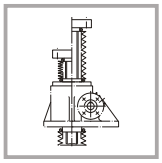

FBA Folding bellows — page 76 - 77

provide spindle protection

Contents list

Accessories for all versions of SGT screw jacks

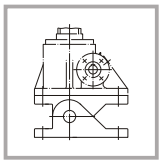
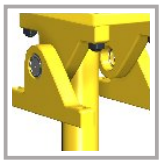

SK Pivot mounting — page 78 - 79

permits pivoting and tipping movement of the screw jack

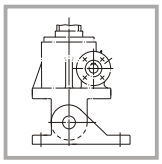

SG Pivot forks / GKA Pivot base unit — page 80 - 81

permits pivoting and tipping movement of the screw jack

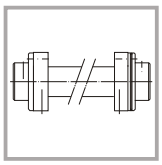
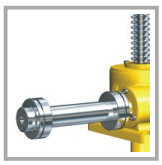

GA, X-GA, GZA, X-GZA Cardan shafts — page 82 - 83

to connect related screw jacks in a system

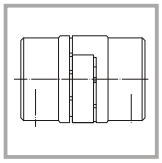
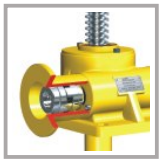

KP Coupling — page 84 - 85

smooth, oscillation damping, torque transmission

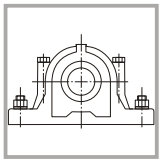
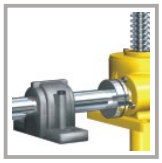

SNH Support bearings — page 84 - 85

to DIN 736 to support extended cardan shafts

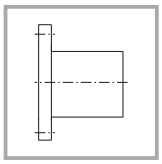
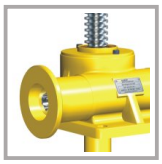

MGA Motor adaptor — page 86 - 87

simple and quick motor connection and protection for flexible coupling

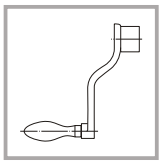

HK Hand crank — page 86 - 87

for manual actuation of screw jacks

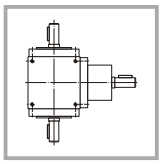

KL Spiral bevel gear units — see category “KL Spiral bevel gear units” page 239 - 244

Selection criteria for platform versions

Summary of the most relevant information for screw jacks according to guide lines:

1. Lift platforms VBG 14 (new standard: EN 1570, EN 1756, EN 1493) to be found detailed www.bge.de

The use of Albert screw jacks in lift platforms and equipment is governed by accident prevention and professional institutes' regulations as they relate to the following components:

1. Safety nut (long version) I.e. the safety nut must have the same effective length as the load carrying nut and be manufactured from the same material (no synthetics)
2. Mechanical safety limit switches (normally open) to monitor the loaded nut
3. Motion detection and speed monitoring switches (inductive proximity device)
4. The lead angle of the trapezoidal screw:
   $2{,}4° \leq \phi \leq 4{,}5°$ → motor with fixed braking torque
   $\phi \geq 4{,}5°$ → two independent braking systems
5. Spindle protection (e.g. folding bellows)
6. Mechanical spindle travel end stop
7. The spindle must have a higher resistance to wear than the loaded nut

Please request individual data sheet as required!

2. Stages and studios BGV C1 (previously VBG 70, GUV 16.15.3) DIN 56940

The version which corresponds to BVG C1 is similar to regulation VBG 14: However the self locking capability for the spindle is not compulsory, in as much as all torque related components must be selected on a basis of double the nominal dynamic load.

1. A motion detection or speed monitoring device is not necessary
2. Both trapezoidal and ball screw spindles may be used
3. The minimum life is 400 operating hours at double the nominal load
4. The static safety factor is 1,5 times the nominal dynamic load
5. For strokes up to 400 mm lifting height the wear monitoring requirement can be omitted, as long as the permitted wear can be visually observed (Using a safety nut). For this situation the loaded nut must be selected for double the nominal working load.
6. When using ball screw spindles the wear monitoring device can also be omitted
7. Safety tolerance ±70 mm (on max. stroke) is necessary

Note: The buckling safety margin is not bindingly regulated in either standard, hence the design function must take the required buckling safety into account according to the specific application.

EN 1570, EN 1756, EN 1493 (previously VBG 14)

1 Safety nut
2 Mechanical safety limit switches to monitor the loaded nut
3 Motion detection and speed monitoring device
4 Spindle lead $\varphi < 2{,}4°$
5 Protection for spindle
6 Mechanical spindle end stop (by agreement)

BGV C1 (previously VBG 70, GUV 16.15.3)

1 Tracking or monitoring nut
2 Mechanical safety limit switch to monitor the loaded nut
3 Motion detection or speed monitoring device (not unconditionally necessary)
4 Trapezoidal or ball screw spindle
5 Contact protection (by agreement)
6 Mechanical spindle end stop (by agreement)
7 Safety tolerance ±70 mm (on max. stroke) not shown

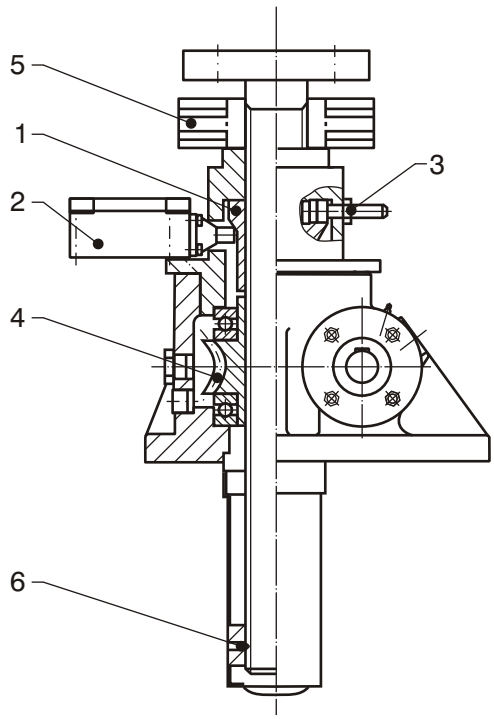

Accessories for platform version

LFM - Safety nut version LO, LU (running nut design)

For applications for screw jacks in theatre stages (BGV C1), lift platforms (VBG 14) and lifting devices involving the transport of persons, the lifting components are selected based on the relevant regulations. Other components must adhere to the safety standards in respect of anti-fall protection (self sustaining spindle or safety brake on the drive input) and, when required, the sense of rotation.
Special materials such as those to resist rust and acid are available; please enquire.

Material: CuZn Brass
Bz Bronze

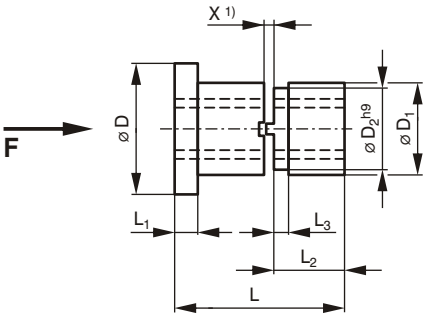

1) The value “X”, which is set on installation, reduces due to wear. This permits visual monitoring of the degree of wear.

LO (visual monitoring)

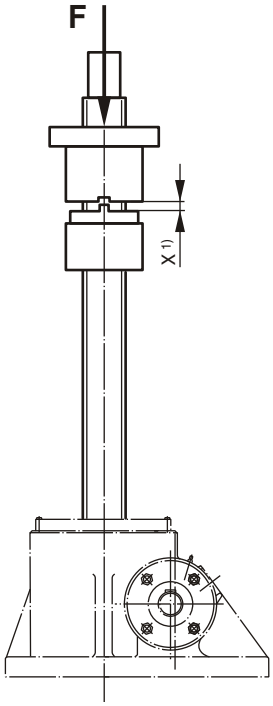

LU (visual monitoring)

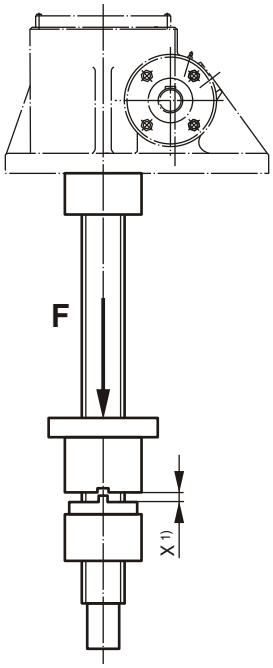

Ordering example:

Safety nut for version LO, LU
Screw jack - size 150
Material (Bronze)

LFM - 150 - Bz

LFM-S - Safety nut version GO, GU (basic design)

With translating spindles the safety nut provides wear indication in the thread of the load carrying nut. Reduction in the value “X” requires the safety nut to be changed. The monitoring can be done visually or by the use of a limit switch.

optical monitoring of the gap “X”

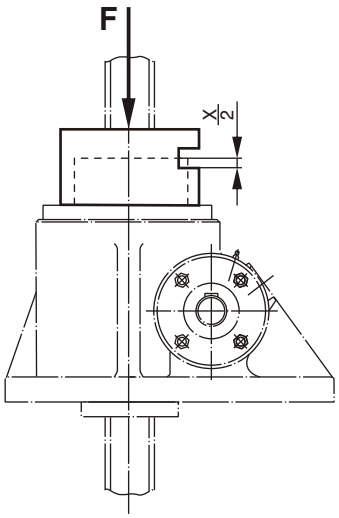

electrical monitoring using a mechanical limit switch

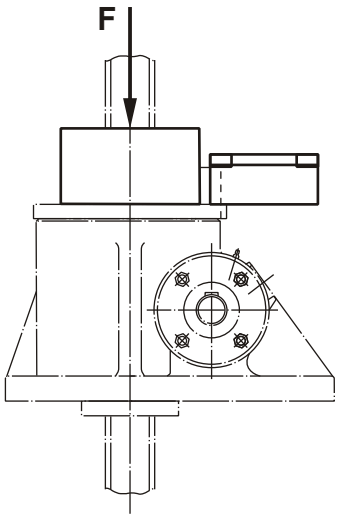

Accessories for screw jacks type SGT

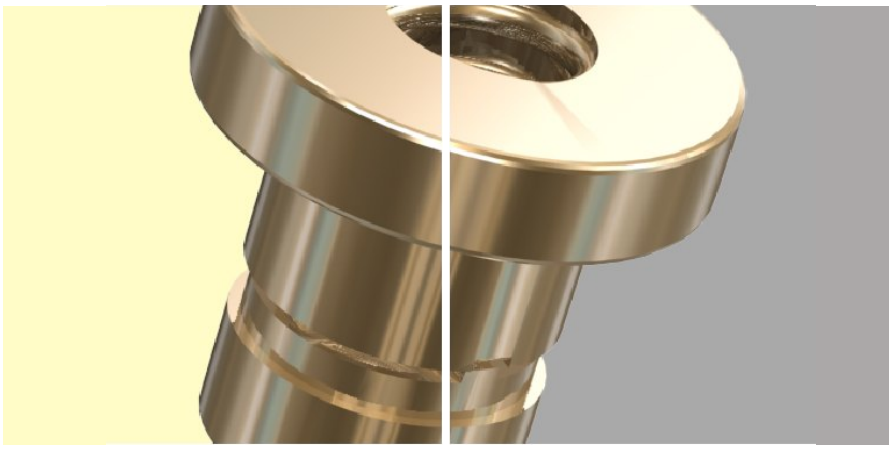

Order code	Dimensions [mm]								Material	Mass approx. [kg]
	D	D_1	D_2	L [1)]	L_1	L_2 [1)]	L_3	X		
LFM - 5	59	45	43	55	10	20	10	3	CuZn, Bz	0,23
LFM - 20	84	45	43	71	20	28	10	3	CuZn, Bz	0,29
LFM - 30	84	45	43	71	20	28	10	3	CuZn, Bz	0,28
LFM - 50	94	70	67	93,5	20	30	10	3,5	CuZn, Bz	0,70
LFM - 150	119	85	82	136	25	55	10	6	CuZn, Bz	1,55
LFM - 200	129	100	95	171	30	65	10	6	CuZn, Bz	2,76
LFM - 300	164	120	117	208	35	80	10	8	CuZn, Bz	4,00
LFM - 350	200	145	140	243	45	90	10	8	CuZn, Bz	7,50
LFM - 500	230	155	152	258	50	95	10	8	CuZn, Bz	7,10

1) Dimensions are based on the short safety nut. Long safety nuts are available. Please enquire.
General tolerances to DIN ISO 2768 - medium

Further information can be provided by our engineers.

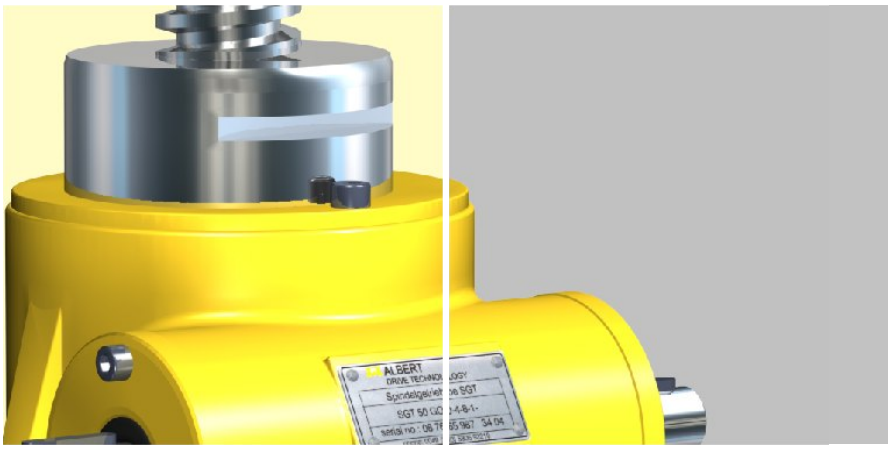

Accessories for version LO, LU (running nut design)

FMA - Trapezoidal flanged nut

ALBERT-trapezoidal flanged nuts have right handed single start threads with a whole number lead. Multi-start and left handed threads are possible. Please enquire.

Thread tolerance: 7H DIN 103

Material: CuZn Brass
Bz Bronze

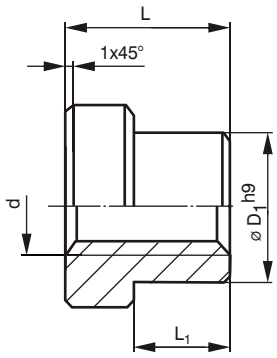

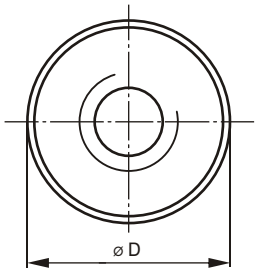

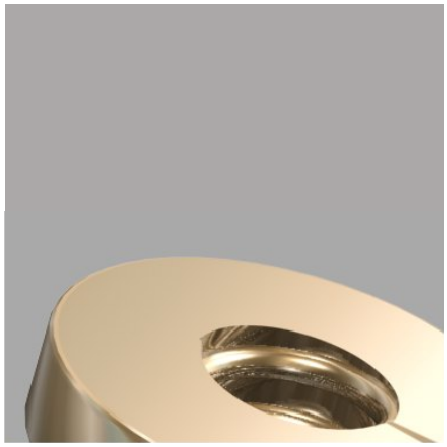

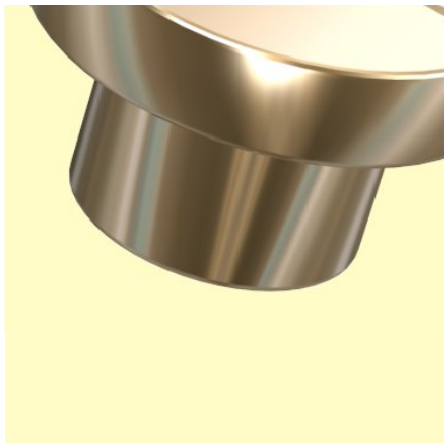

Ordering example:

Trapezoidal flanged nut
Tr 40x7
Material (Bronze)

FMA - 040 - 07 - Bz

TMA - Trapezoidal spindle nut

ALBERT-trapezoidal spindle nuts have right handed single start threads with a whole number lead. Multi-start and left handed threads are possible. Please enquire.

Thread tolerance: 7H DIN 103

Material: CuZn Brass
Bz Bronze

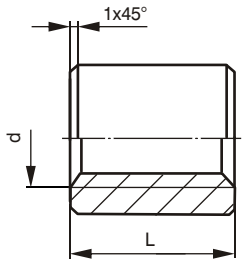

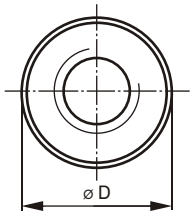

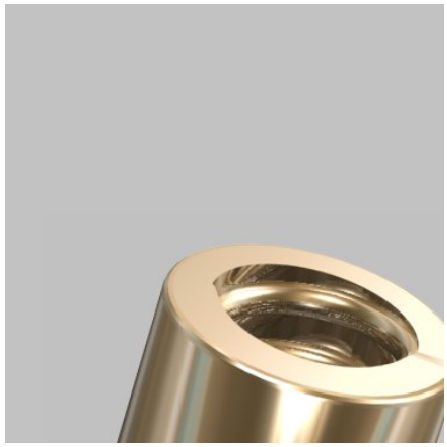

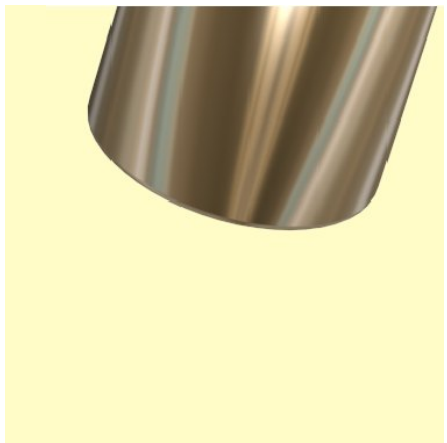

Ordering example:

Trapezoidal spindle nut
Tr 40x7
Material (Bronze)

TMA - 040 - 07 - Bz

Accessories for screw jacks type SGT

Order code	Dimensions [mm]					Material	Mass [≈kg]
	d	D	D_1	L	L_1		
FMA - 016 - 04	Tr 16x4	49	40	32	22	CuZn, Bz	0,34
FMA - 018 - 04	Tr 18x4	49	40	32	22	CuZn, Bz	0,32
FMA - 020 - 04	Tr 20x4	49	40	32	22	CuZn, Bz	0,30
FMA - 020 - 06 [1)]	Tr 20x6	49	40	32	22	CuZn, Bz	0,29
FMA - 024 - 05	Tr 24x5	49	40	32	22	CuZn, Bz	0,25
FMA - 026 - 05	Tr 26x5	74	50	40	20	CuZn, Bz	0,88
FMA - 026 - 06 [1)]	Tr 26x6	74	50	40	20	CuZn, Bz	0,87
FMA - 028 - 05	Tr 28x5	74	50	40	20	CuZn, Bz	0,85
FMA - 030 - 06 [1)]	Tr 30x6	74	50	40	20	CuZn, Bz	0,80
FMA - 032 - 06	Tr 32x6	74	50	40	20	CuZn, Bz	0,76
FMA - 036 - 06	Tr 36x6	84	70	60	40	CuZn, Bz	1,70
FMA - 040 - 07 [1)]	Tr 40x7	84	70	60	40	CuZn, Bz	1,55
FMA - 044 - 07	Tr 44x7	84	70	60	40	CuZn, Bz	1,39
FMA - 045 - 08	Tr 45x8	84	70	60	40	CuZn, Bz	1,33
FMA - 050 - 08	Tr 50x8	109	90	75	50	CuZn, Bz	3,34
FMA - 060- 09	Tr 60x9	109	90	75	50	CuZn, Bz	2,70
FMA - 060 - 12 [1)]	Tr 60x12	109	90	75	50	CuZn, Bz	2,59
FMA - 065 - 10	Tr 65x10	119	90	100	70	CuZn, Bz	3,47
FMA - 065 - 12 [1)]	Tr 65x12	119	90	100	70	CuZn, Bz	3,37
FMA - 070 - 10	Tr 70x10	154	130	120	85	CuZn, Bz	11,00
FMA - 080 - 10	Tr 80x10	154	130	120	85	CuZn, Bz	9,67
FMA - 090 - 12	Tr 90x12	154	130	120	85	CuZn, Bz	8,02
FMA - 090 - 16 [1)]	Tr 90x16	154	130	120	85	CuZn, Bz	7,70
FMA - 100 - 16 [1)]	Tr 100x16	190	150	145	100	Bz	15,10
FMA - 120 - 16 [1)]	Tr 120x16	220	160	155	105	Bz	17,75

[1)] Standard
General tolerances to DIN ISO 2768 - medium

Order code	Dimensions [mm]			Material	Mass [kg]
	d	D	L		
TMA - 016 - 04	Tr 16x4	36	24	CuZn, Bz	0,16
TMA - 018 - 04	Tr 18x4	40	27	CuZn, Bz	0,22
TMA - 020 - 04	Tr 20x4	45	30	CuZn, Bz	0,32
TMA - 020 - 06 [1)]	Tr 20x6	45	30	CuZn, Bz	0,31
TMA - 024 - 05	Tr 24x5	50	36	CuZn, Bz	0,45
TMA - 026 - 05	Tr 26x5	50	39	CuZn, Bz	0,46
TMA - 026 - 06 [1)]	Tr 26x6	50	39	CuZn, Bz	0,45
TMA - 028 - 05	Tr 28x5	60	42	CuZn, Bz	0,78
TMA - 030 - 06 [1)]	Tr 30x6	60	45	CuZn, Bz	0,78
TMA - 032 - 06	Tr 32x6	60	48	CuZn, Bz	0,79
TMA - 036 - 06	Tr 36x6	75	54	CuZn, Bz	1,53
TMA - 040 - 07 [1)]	Tr 40x7	80	60	CuZn, Bz	1,87
TMA - 044 - 07	Tr 44x7	80	66	CuZn, Bz	1,89
TMA - 045 - 08	Tr 45x8	90	72	CuZn, Bz	2,84
TMA - 050 - 08	Tr 50x8	90	75	CuZn, Bz	2,69
TMA - 060- 09	Tr 60x9	100	90	CuZn, Bz	3,63
TMA - 060 - 12 [1)]	Tr 60x12	100	90	CuZn, Bz	3,51
TMA - 065 - 10	Tr 65x10	110	97,5	CuZn, Bz	4,85
TMA - 065 - 12 [1)]	Tr 65x12	110	97,5	CuZn, Bz	4,76
TMA - 070 - 10	Tr 70x10	110	105	CuZn, Bz	4,70
TMA - 080 - 10	Tr 80x10	120	120	CuZn, Bz	5,95
TMA - 090 - 12	Tr 90x12	135	135	CuZn, Bz	8,41
TMA - 090 - 16 [1)]	Tr 90x16	135	135	CuZn, Bz	8,04
TMA - 100 - 16 [1)]	Tr 100x16	150	150	CuZn, Bz	11,23
TMA - 120 - 16 [1)]	Tr 120x16	165	180	Bz	13,49

[1)] Standard
General tolerances to DIN ISO 2768 - medium

Accessories for version GO, GU (basic design)

SE - Clevis attachment

ALBERT-clevis attachment, such as clevises, ball joints and special support tubes, are designed for small operating loads.
Special materials such as those to resist rust and acid are available; please enquire.

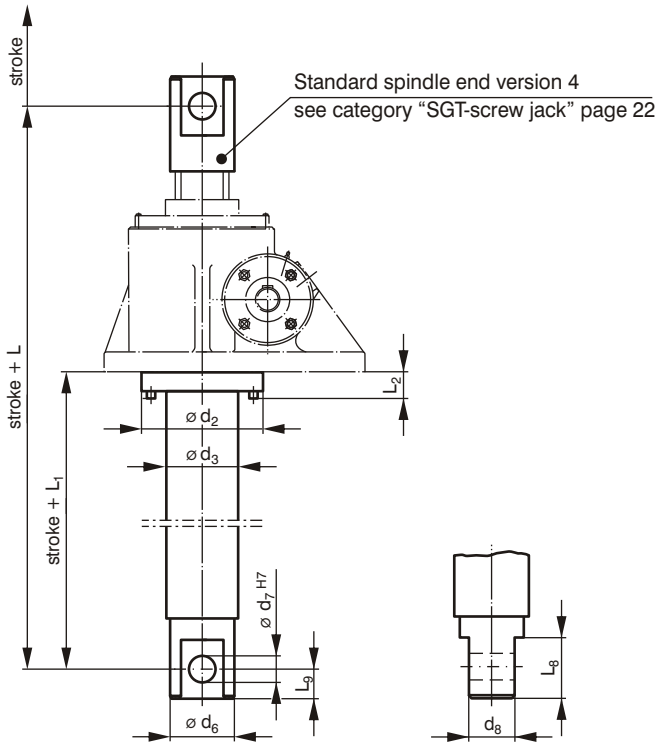

Ordering example:

Clevis attachment

Screw jack - size 150

SE - 150

VK - Square rotation preventer

In order to permit linear motion the spindle must be secured against rotation. This can be achieved either through the connection to the moving part or with ALBERT square rotation preventer using the square section tube.
Special materials such as those to resist rust and acid are available; please enquire.

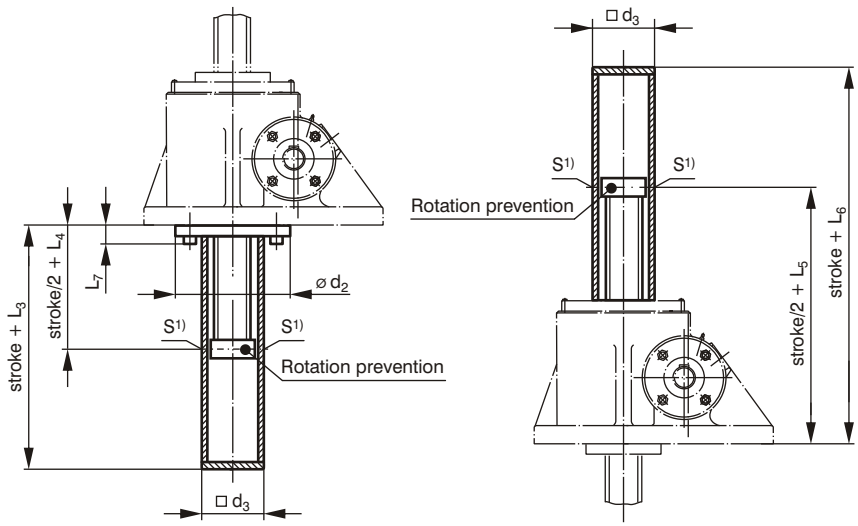

1) Grease nipple DIN 71412 AM6

Ordering example:

Square rotation preventer

Screw jack - size 150

VK - 150

Accessories for screw jacks type SGT

Order code	Dimensions [mm]									
	d_2	d_3	d_6	d_7	d_8	L	L_1	L_2	L_8	L_9
SE - 5	59	30	30	15	20	182	61	11	30	15
SE - 20	78	45	40	15	30	239	72	14	46	23
SE - 30	78	45	40	15	30	239	72	14	46	23
SE - 50	108	60	60	25	40	310	90	18	60	30
SE - 150	129	80	80	35	60	370	110	22	90	45
SE - 200	148	90	85	40	65	412	115	22	100	50
SE - 300	187	125	120	50	80	472	130	26	120	60
SE - 350	197	130	128	60	90	572	167	26	150	70
SE - 500	225	150	148	65	120	674	202	26	170	85

General tolerances to DIN ISO 2768 - medium apply to machined surfaces

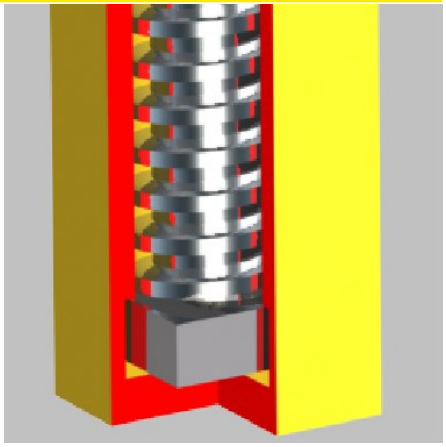

Order code	Dimensions [mm]						
	d_2	d_3	L_3	L_4	L_5	L_6	L_7
VK - 5	59	30	67	34	97	130	11
VK - 20	78	40	92	47,5	134,5	179	14
VK - 30	78	40	92	47,5	135,5	180	14
VK - 50	108	60	98	51,5	171,5	218	18
VK - 150	129	80	115	61	199	253	22
VK - 200	148	90	121	64	234	291	22
VK - 300	187	120	132	70,5	268,5	330	26
VK - 350	197	140	137	73	299	363	26
VK - 500	225	150	142	75,5	328,5	395	26

General tolerances to DIN ISO 2768 - medium apply to machined surfaces

Accessories for all versions

SFA - Spiral protective sleeve

ALBERT-spiral protective sleeves protect trapezoidal spindles from dirt and reduce the risk of accidents.

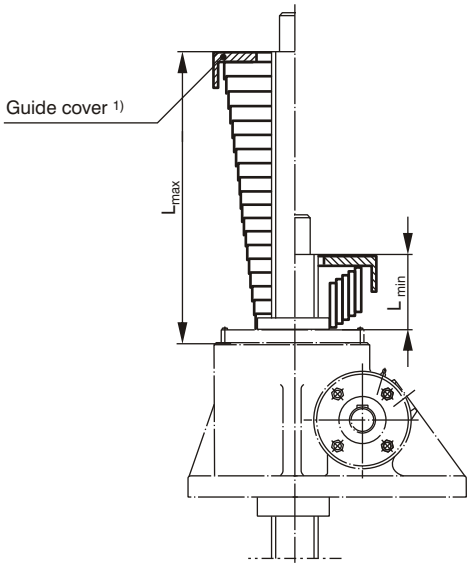

1) The guide cover is not included with the protective sleeve and should be ordered separatly.

FBA - Folding bellows

ALBERT-folding bellows protect the spindle from dirt and other external contamination.
For extensions greater than 1000 mm, methods to prevent side displacement are necessary. For a bellows greater than 800 mm long, and for horizontal installation, support hoops are required.

Extension dimension: $A_z = Z_d$ + stroke
Compression dimension: Z_d = 0,15 x stroke

Spindle extension:
Basic design (translating spindle): V_L = 0,15 x stroke
Running nut design (rotating spindle): V_L = 0,3 x stroke

Basic design
Standard spindle end
version 1 and 2

Basic design
Standard spindle end
version 3

Basic design
Standard spindle end
version 4

Running nut design
Standard spindle end
version 1 and 2

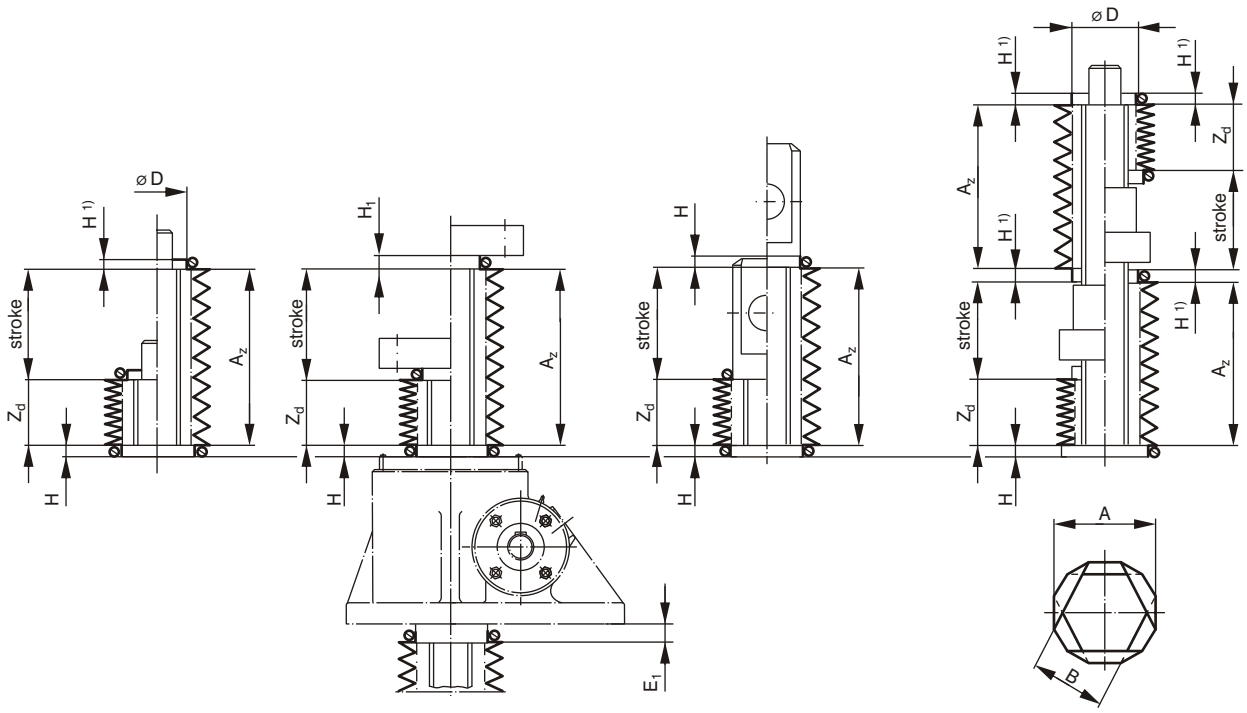

1) Interface with customer's design

Accessories for screw jacks type SGT

Further information can be provided by our engineers.

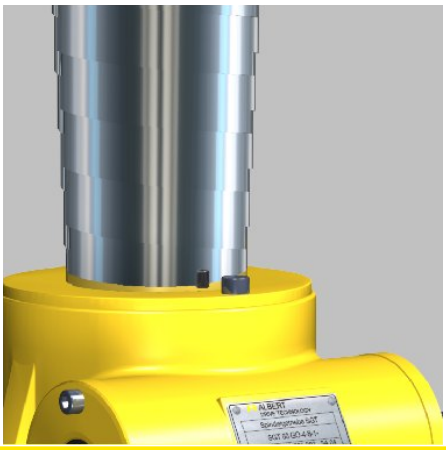

Order code	Dimensions [mm]				
	D	H	H_1	A	B
FBA - 5	30 / 36 / 45	10	10	75	38
FBA - 20	40 / 48 /60	12	12	75	38
FBA - 30	40 / 48 / 60	12	12	105	63
FBA - 50	45 / 65 / 83	12	12	105	63
FBA - 150	65 / 82 / 110	12	12	125	75
FBA - 200	85 / 100 / 140	12	25	140	100
FBA - 300	100 / 130 / 160	12	30	150	110
FBA - 350	110 / 150 / 180	12	30	180	130

Only valid for vertical spindles (upward and downwards), for specific envelopes, normal temperature and standard materials.

Material [1]	Material code for order code
Woven polyester protected	1
Soft PVC	2
Thermoplastic	3
CSM rubber	4
CR rubber	5
Carbon fibre-aluminium coated	6

[1] Other materials are available. Please enquire.

Material code	Version	Thermal characteristics	dust proof	water proof	oil resistant	UV resistant	chemical resistant	resistant to welding splash	Compressed length [2] approx.	Application
1	Polygonal replaceable bellows	-15°C to + 70°C	●	—	●	●	—	—	0,15 Stroke [3]	Standard
2	Round section, dip moulded bellows	-20°C to + 70°C	●	●	○	—	—	—	0,30 Stroke	for volume manufacture
3	Bellows made from circular disks	0°C to + 60°C	●	—	○	●	—	—	0,15 Stroke	Standard
4	Bellows made from circular disks	-20°C to +120°C	●	●	●	●	●	—	0,15 Stroke	Chemical
5	Round section - extended	-20°C to +100°C	●	—	●	●	—	—	0,20 Stroke	tough applications
6	Textile bellows with wire support hoops	up to +200°C	●	—	○	●	—	●	0,30 Stroke	hot applications

[2] 1. Dimension for spindle extension. Safety tolerance must be taken into account.
2. Allow for breather pressure relief.
3. The relationship of outer and inner diameter of the bellows is crucial in determining the compressed length (Zd).

[3] Stroke < 300 approx. 0,2 stroke

All details are for guidance only. A check of the suitability for the application of particular materials should be carried out.

● - Yes
○ - Conditional
— - No

Ordering example:

- Folding bellows
- Screw jack - size 5
- Material
- Compressed length Z_d
- Extension length A_z
- Collar
- Collar

FBA - 5 - 1 - 80 - 180 - 36 - 36

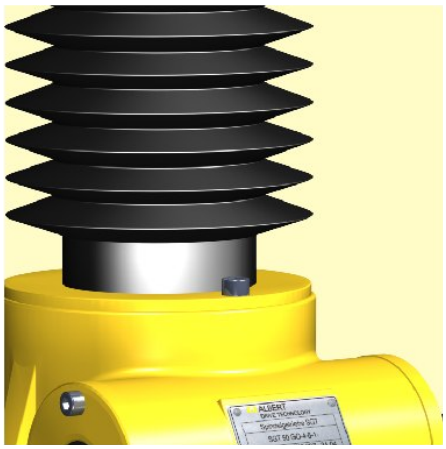

Accessories for all versions

SK - Pivot mounting

ALBERT-pivot mountings allow articulation and tilting of the screw jack. It is necessary to ensure that the drive elements are free to swivel at two points. One point is the spindle end (version 4 - clevis) and the other, the ALBERT pivot mounting. Any resultant side loads must be minimised.

On assembly loosen all screws and align the pivot mounting so that it can float freely in both axes.

The permissible forces are dependent on the load direction and they are lower than the maximum lifting force of the screw jacks. For futher information, please ask our engineers from ALBERT.

Special materials such as those to resist rust and acid are available; please enquire.

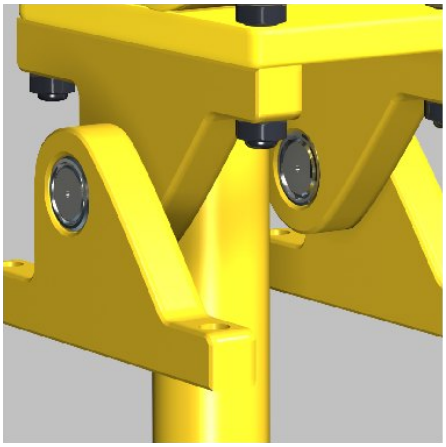

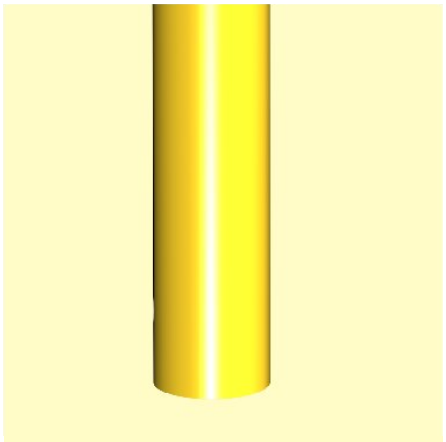

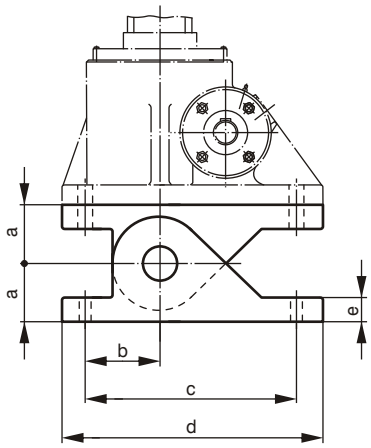

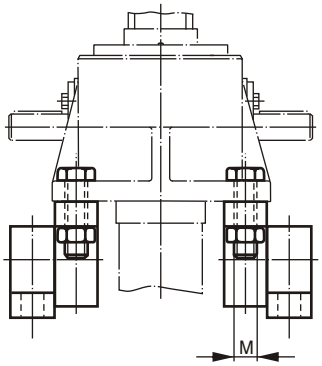

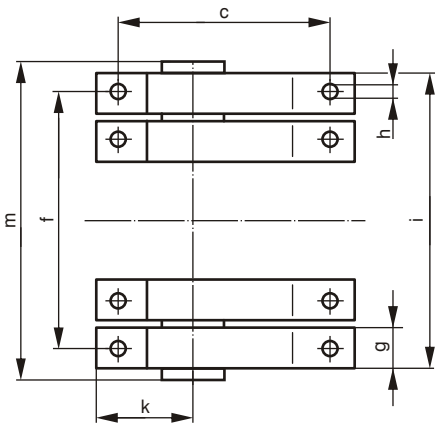

Ordering example:

Pivot mounting

Screw jack - size 150

SK - 150

Accessories for screw jacks type SGT

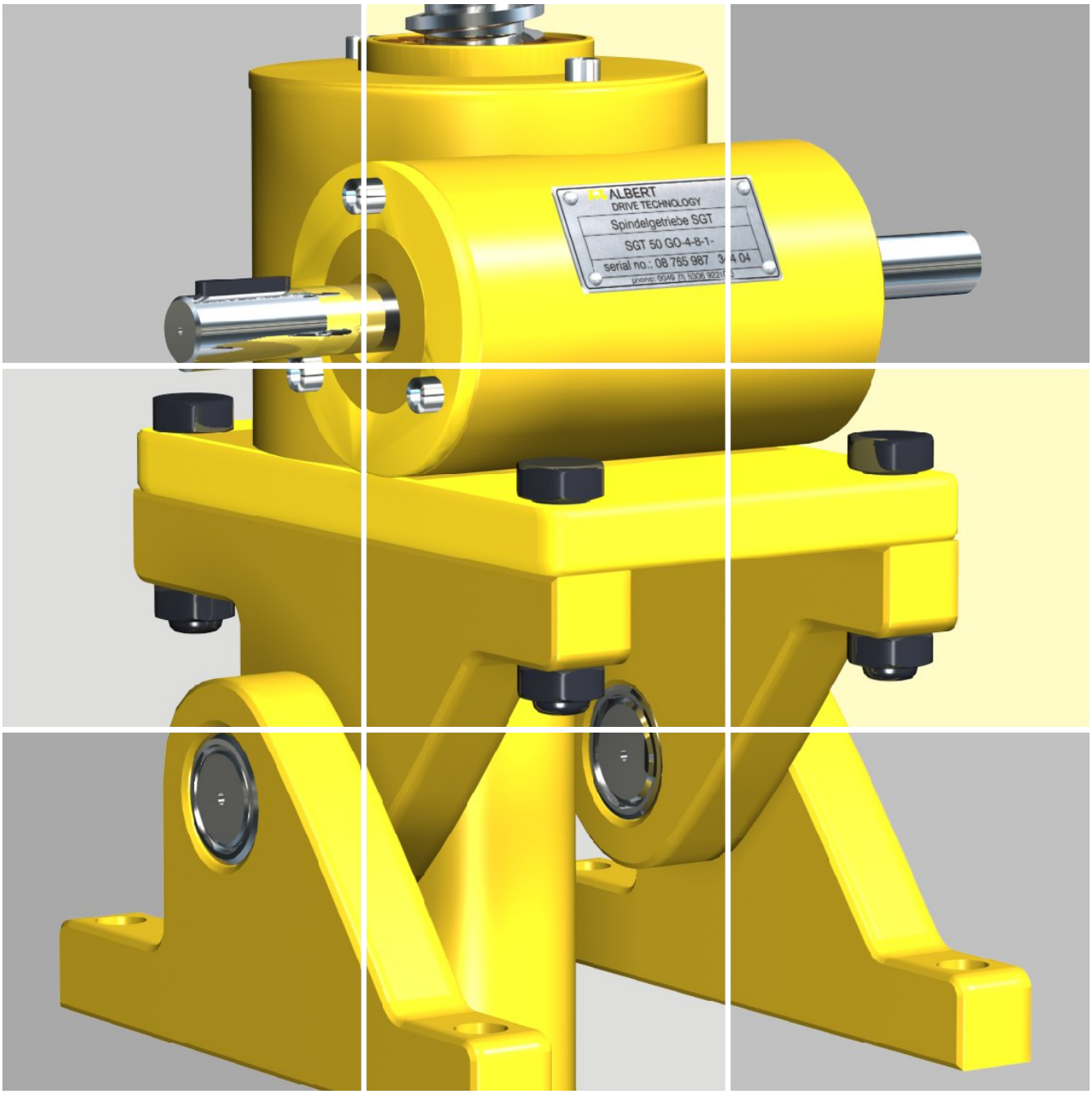

Order code	Dimensions [mm]												Tightening torque T [Nm]	Material	Mass [kg]
	a	b	c	d	e	f	g	h	i	k	m	M			
SK - 5	27,5	40	80	100	10	123	15	9	138	-	-	M8	24	Steel	1,7
SK - 20	40	50	135	165	18	217	30	14	247	65	-	M10	48	Steel	5,1
SK - 30	40	50	135	165	18	155	30	14	185	65	-	M12	83	Steel	5,5
SK - 50	50	58	168	214	22	199	40	17	239	82	243	M16	200	Steel	11,2
SK - 150	60	63,5	190	240	25	241	40	21	281	88	305	M20	390	Steel	15,1
SK - 200	70	95	240	297	29	287	60	28	347	124	378	M27	995	Steel	41,1
SK - 300	80	95	280	355	30	318	60	35	378	133	409	M33	1830	Steel	46,2
SK - 350	90	135	360	430	60	357	70	35	427	170	454	M33	1830	Steel	92,3

General tolerances to DIN ISO 2768 - medium apply to machined surfaces

Accessories for all versions

SG - Pivot fork

In order to allow articulation or tilting motions with screw jacks the drive elements must be secured at two swivel points. This can be achieved using standard spindle end 4 (Clevis) and integrally cast lugs on the ALBERT trunnion housing. The housing can be in cast steel, grey cast iron, cast aluminium or stainless steel.
Special materials such as those to resist acid are available; please enquire.

Ordering example:

Pivot fork
Screw jack - size 150

SG - 150

GKA - Pivot base unit

ALBERT-pivot base unit provides articulation and tilting of the screw jack when combined with the trunnion lugs.
Special materials such as those to resist rust and acid are available; please enquire.

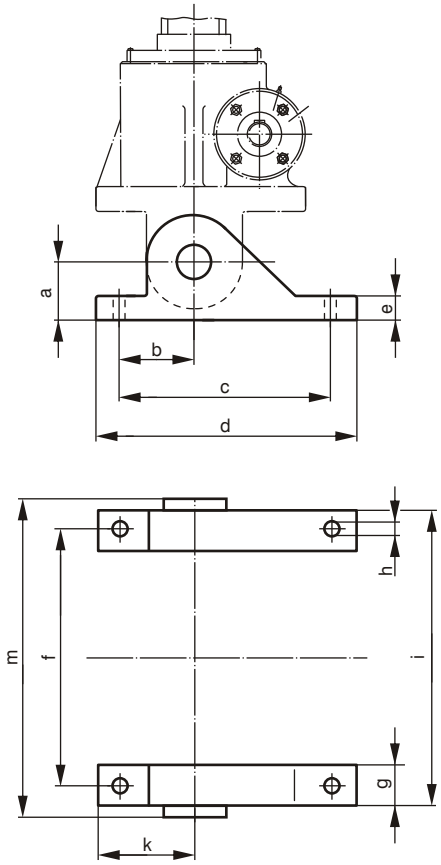

Ordering example:

Pivot base unit
Screw jack - size 150

GKA - 150

Accessories for screw jacks type SGT

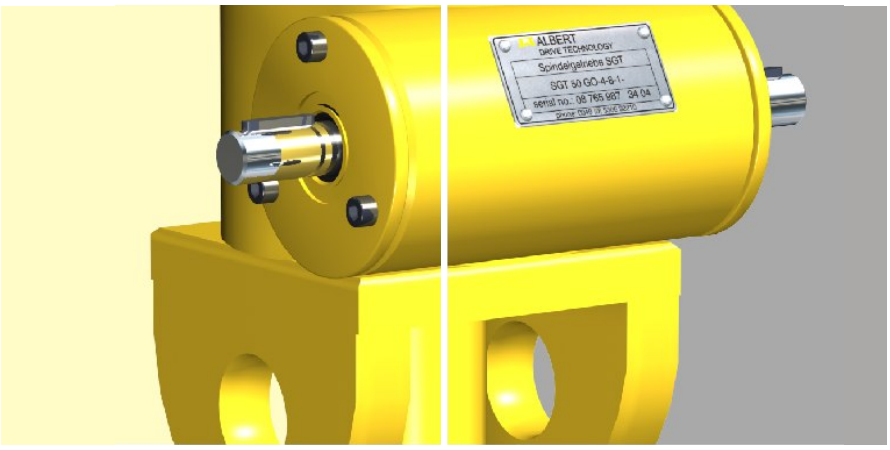

Order code	Dimensions [mm]
SG - 5	
SG - 20	
SG - 30	Dimensions on request
SG - 50	
SG - 150	
SG - 200	
SG - 300	

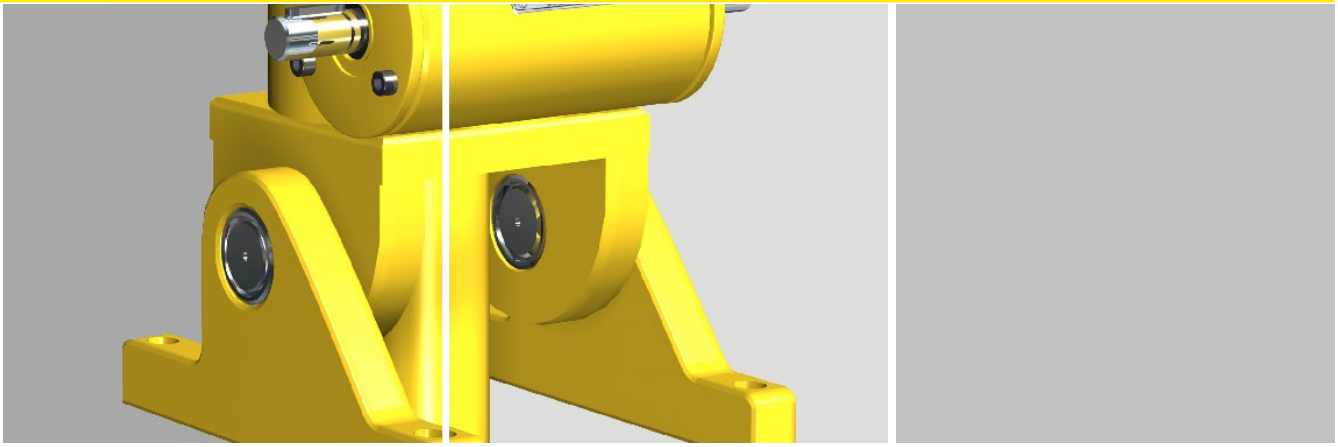

Order code	Dimensions [mm]											Material	Mass [kg]
	a	b	c	d	e	f	g	h	i	k	m		
GKA - 5	27,5	40	80	100	10	123	15	9	138	-	-	Steel	1,1
GKA - 20	40	50	135	165	18	217	30	14	247	65	-	Steel	3,3
GKA - 30	40	50	135	165	18	155	30	14	185	65	-	Steel	3,3
GKA - 50	50	58	168	214	22	199	40	17	239	82	243	Steel	6,1
GKA - 150	60	63,5	190	240	25	241	40	21	281	88	305	Steel	8,5
GKA - 200	70	95	240	297	29	287	60	28	347	124	378	Steel	25,3
GKA - 300	80	95	280	355	30	318	60	35	378	133	409	Steel	27,3
GKA - 350	90	135	360	430	60	357	70	35	427	170	454	Steel	51,1

General tolerances to DIN ISO 2768 - medium apply to machined surfaces

Accessories for all versions

GA, X-GA, GZA, X-GZA - Cardan shafts

ALBERT-cardan shafts are used to connect related screw jacks within a system. Four different types are offered for various applications:

GA - Cardan shaft
- not centered version
- for low to moderate speed
- for short to medium lengths
- G= rubber

X-GA - Cardan shaft
- not centered version
- for low to moderate speed
- for short to medium lengths
- X= plastic

GZA - Cardan shaft
- centred version
- for high speeds
- for long spans and/or when a central support bearing is not possible
- when silent running is required
- G= rubber

X-GZA - Cardan shaft
- centred version
- for high speeds
- for long spans and/or when a central support bearing is not possible
- when silent running is required
- X= plastic

Since determining the precise limiting values is complex, please consult ALBERT. Special materials such as those to resist rust and acid are available. Please enquire.

Type GA and X-GA **Type GZA and X-GZA**

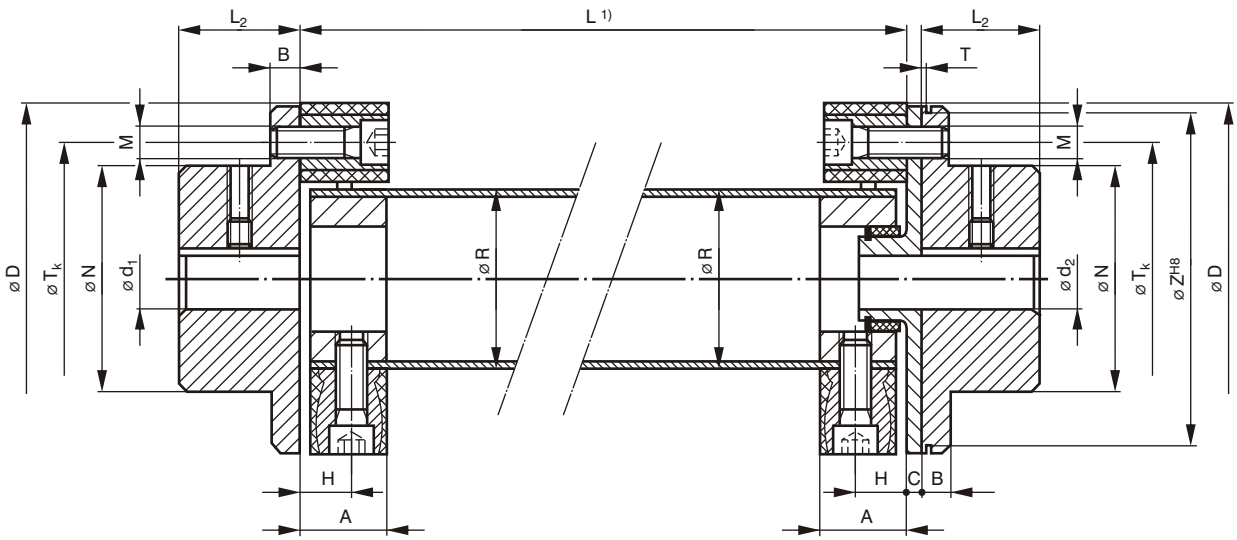

1) Dimension L to customer requirements.
The maximum length L_{max} can be determined from the adjacent graph.

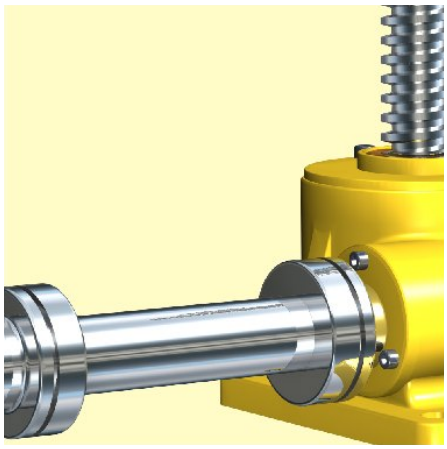

Ordering example:

- Cardan shaft type GZA
- Size 4
- Length L
- Hub bore d_1
- Hub bore d_2

GZA - 4 - 100 - 25 - 38

Accessories for screw jacks type SGT

Shaft length related to rotational speed

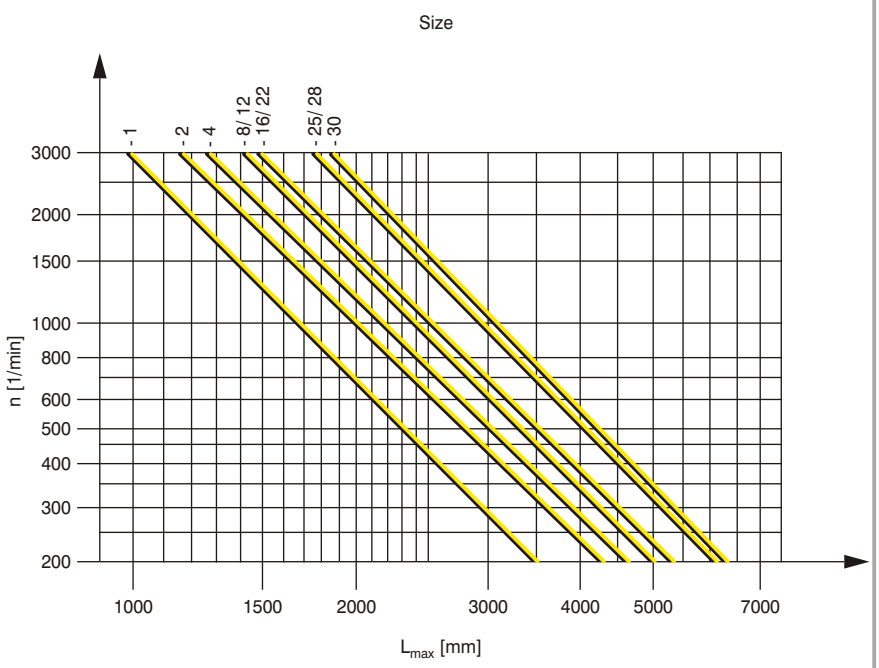

Size	Mass [kg] [1] for 2 hubs	Mass [kg] [1] for 1m tube
1	1,0	1,1
2	2,2	1,4
4	3,4	1,6
8	7,3	2,2
12	7,3	2,2
16	12,4	2,5
22	13,2	2,5
25	19,1	3,1
28	19,5	3,1
30	31,1	4,8

[1] Material: Steel

Order code	Dimensions [mm] A	B	d_1 / d_2 Pre-bore	d_1 / d_2 max.	D	H	L_2	M	N	R	T_k/ Hole pitch	C	T	Z	max. torque [Nm]
GA - 1	24	7	8	25	56	13	24	M6	36	30	44/ 2x180°	-	-	-	10
GA - 2	24	8	12	38	85	14	28	M8	55	40	68/ 2x180°	-	-	-	20
GA - 4	28	8	15	45	100	16	30	M8	65	45	80/ 3x120°	-	-	-	40
GA - 8	32	10	18	55	120	18	42	M10	80	60	100/ 3x120°	-	-	-	80
GA - 12	32	10	18	55	122	18	42	M10	80	60	100/ 4x90°	-	-	-	120
GA - 16	42	12	20	70	150	24	50	M12	100	70	125/ 3x120°	-	-	-	160
GA - 22	42	12	20	70	150	24	50	M12	100	70	125/ 4x90°	-	-	-	220
GA - 25	46	14	20	85	170	26	55	M14	115	85	140/ 3x120°	-	-	-	250
GA - 28	46	14	20	85	170	26	55	M14	115	85	140/ 4x120°	-	-	-	350
GA - 30	58	16	25	100	200	33	66	M16	140	100	165/ 3x120°	-	-	-	400
GZA - 1	24	7	8	25	56	13	24	M6	36	30	44/ 2x180°	5	1,5	52	10
GZA - 2	24	8	12	38	85	14	28	M8	55	40	68/ 2x180°	5	1,5	80	20
GZA - 4	28	8	15	45	100	16	30	M8	65	45	80/ 3x120°	5	1,5	95	40
GZA - 8	32	10	18	55	120	18	42	M10	80	60	100/ 3x120°	5	1,5	115	80
GZA - 12	32	10	18	55	122	18	42	M10	80	60	100/ 4x90°	5	1,5	115	120
GZA - 16	42	12	20	70	150	24	50	M12	100	70	125/ 3x120°	5	1,5	145	160
GZA - 22	42	12	20	70	150	24	50	M12	100	70	125/ 4x90°	5	1,5	145	220
GZA - 25	46	14	20	85	170	26	55	M14	115	85	140/ 3x120°	5	1,5	165	250
GZA - 28	46	14	20	85	170	26	55	M14	115	85	140/ 4x120°	5	1,5	165	350
GZA - 30	58	16	25	100	200	33	66	M16	140	100	165/ 3x120°	5	1,5	195	400
X-GA - 1	18	7	8	25	57	12	24	M6	36	30	44/ 2x180°	-	-	-	10
X-GA - 2	24	8	12	38	88	14	28	M8	55	40	68/ 2x180°	-	-	-	30
X-GA - 4	25	8	15	45	100	14,5	30	M8	65	45	80/ 3x120°	-	-	-	60
X-GA - 8	30	10	18	55	125	17	42	M10	80	60	100/ 3x120°	-	-	-	120
X-GA - 16	35	12	20	70	155	21	50	M12	100	70	125/ 3x120°	-	-	-	240
X-GA - 25	40	14	20	85	175	23	55	M14	115	85	140/ 3x120°	-	-	-	370
X-GA - 30	50	16	25	100	205	30	66	M16	140	100	165/ 3x120°	-	-	-	550
X-GZA - 1	18	7	8	25	57	12	24	M6	36	30	44/ 2x180°	5	1,5	52	10
X-GZA - 2	24	8	12	38	88	14	28	M8	55	40	68/ 2x180°	5	1,5	80	30
X-GZA - 4	25	8	15	45	100	14,5	30	M8	65	45	80/ 3x120°	5	1,5	95	60
X-GZA - 8	30	10	18	55	125	17	42	M10	80	60	100/ 3x120°	5	1,5	115	120
X-GZA - 16	35	12	20	70	155	21	50	M12	100	70	125/ 3x120°	5	1,5	145	240
X-GZA - 25	40	14	20	85	175	23	55	M14	115	85	140/ 3x120°	5	1,5	165	370
X-GZA - 30	50	16	25	100	205	30	66	M16	140	100	165/ 3x120°	5	1,5	195	550

General tolerances to DIN ISO 2768 - medium

Accessories for all versions

KP - Coupling

The ALBERT-coupling provides smooth, vibration free transmission of torque. Shock and vibration affecting the input are effectively damped. The coupling is torsionally soft and can accommodate small parallel errors (axial and radial) as well as angular offset in the connected shafts.
Temperatures between -40°C and +100°C.
Special materials such as those to resist rust and acid can be supplied. Please enquire.

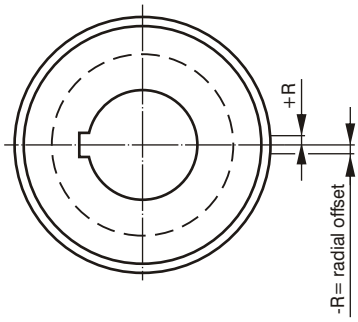

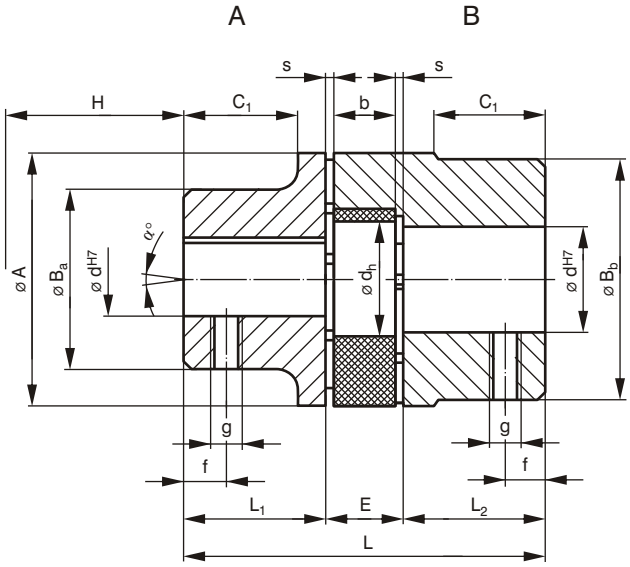

Ordering example:

- Coupling
- Size
- Material
- Input hub version
- Input hub bore “d”
- Output hub version
- Output hub bore “d”

KP - 28/38 - GG - A - 20 - B - 35

SNH - Support bearings

ALBERT-support bearings correspond to DIN 736 complete with sealed ball bearings having tapered bores and cylindrical locking collar. Dependent on the mounting situation the bearing may be fixed or floating!
Special materials such as those to resist rust and acid are available. Please enquire.

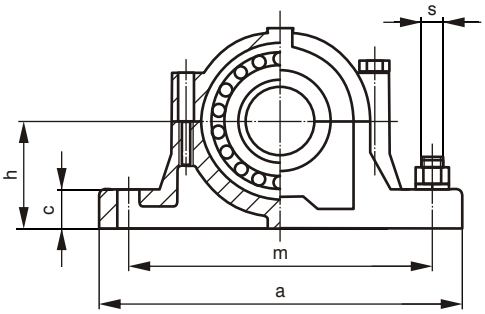

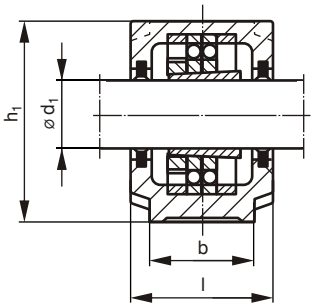

Ordering example:

- Support bearings
- Size

SNH - 516

Accessories for screw jacks type SGT

Order code	Dimensions [mm]																
	Stock bores				A	B_a	B_b	C_1	E	H[2]	L	L_1/L_2	b	d_h	f	g	s
	Hub version A d[1]		Hub version B d[1]														
	min.	max.	min.	max.													
KP - 14	-	-	4	16	30	-	30	-	13	12	35	11	10	10	5	M4	1,5
KP - 19/24	6	9	12 / 19 [3]	24	40	32	39	21	16	14	66	25	12	18	10	M5	2
KP - 24/32	10 / 8 [3]	24	14 / 16 [3]	32	55	40	52 / 53 [3]	26	18	16	78	30	14	27	10	M5	2
KP - 28/38	12 / 10 [3]	28	28	38	65	45 / 48 [3]	62 / 63 [3]	29	20	18	90	35	15	30	15	M6	2,5
KP - 38/45	14	38	38	45	80	66	77 / 79 [3]	37 / 39 [3]	24	19	114	45	18	38	15	M8	3
KP - 42/55	19	42	42	55	95	75	94	40	26	21	126	50	20	46	20	M8	3
KP - 48/60	19	48	48	60	105	85	102	45	28	22	140	56	21	51	20	M8	3,5
KP - 55/70	19	55	55	70	120	98	118	52	30	23	160	65	22	60	20	M10	4

[1] Keyway to BS 4235
[2] Minimum dimension allowing radial insertion
[3] The second value relates only to aluminium

General tolerances to DIN ISO 2768 - medium

Material	Order code
Sintered	Sint
Grey cast iron	GG
Aluminium	Al
SG iron	GS
Steel	St
SG iron	GGG

Order code	Operational data					
	Axial float X [mm]	Radial offset ± R [mm]	Angular misalignment ± α [°]	Torsional displacement at T_{max} [°]	Nominal torque T_{Nenn} [Nm]	max. torque T_{max} [Nm]
KP - 14	0,6	0,2	1,5	10	7,5	15
KP - 19/24	1,2	0,4	1,5	5	10	20
KP - 24/32	1,5	0,75	1,5	5	35	70
KP - 28/38	1,5	1,0	1,5	5	95	190
KP - 38/45	1,8	1,0	1,5	5	190	380
KP - 42/55	2,0	1,0	1,5	5	265	530
KP - 48/60	2,1	1,3	1,5	5	310	620
KP - 55/70	2,3	1,3	1,5	5	375	750

Order code	Dimensions [mm]									$C_{dyn.}$ [N]	$Co_{stat.}$ [N]	Bearing	Mass [kg]
	d_1	h	l	a	b	c	m	$\sim h_1$	s				
SNH - 505	20	40	67	165	46	19	130	71	M12	14300	4000	1205EK	1,7
SNH - 506	25	50	77	185	52	22	150	87	M12	15600	4650	1205EK	2,4
SNH - 507	30	50	82	185	52	22	150	92	M12	19000	6000	1207EK	2,7
SNH - 508	35	60	85	205	60	25	170	106	M12	19900	6950	1208EK	3,5
SNH - 509	40	60	85	205	60	25	170	109	M12	22900	7800	1209EK	3,7
SNH - 510	45	60	90	205	60	25	170	112	M12	26500	9150	1210EK	4,1
SNH - 511	50	70	95	255	70	28	210	127	M16	27600	10600	1211EK	5,5
SNH - 512	55	70	105	255	70	30	210	133	M16	31200	12200	1212EK	6,5
SNH - 513	60	80	110	275	80	30	230	148	M16	35100	14000	1213EK	8,2
SNH - 515	65	80	115	280	80	30	230	154	M16	39000	15600	1215K	9,2
SNH - 516	70	95	120	315	90	32	260	175	M20	39700	17000	1216K	12,1
SNH - 517	75	95	125	320	90	32	260	181	M20	48800	20800	1217K	13,2
SNH - 518	80	100	140	345	100	35	290	192	M20	57200	23600	1218K	16,3
SNH - 519	85	112	145	345	100	35	290	210	M20	63700	27000	1219K	18,0
SNH - 520	90	112	160	380	110	40	320	215	M24	68900	30000	1220K	22,8
SNH - 522	100	125	175	410	120	45	350	240	M24	88400	39000	1222K	29,2
SNH - 524	110	140	185	410	120	45	350	270	M24	119000	53000	1224K	35,0
SNH - 526	115	150	190	445	130	50	380	290	M24	644000	930000	22226EK	44,0
SNH - 528	125	150	205	500	150	50	420	305	M30	610000	900000	22228CCK/W33	55,0

General tolerances to DIN ISO 2768 - medium

Accessories for all versions

MGA - Motor adaptor

ALBERT-motor adaptors provide a quick and secure method for connecting drive motors and protecting the flexible coupling. Adaptors can be mounted to the right or left hand end of the worm shaft. Normally the SGT screw jack is shipped with the motor adaptor already assembled.
Special materials such as those to resist rust and acid are available. Please enquire.

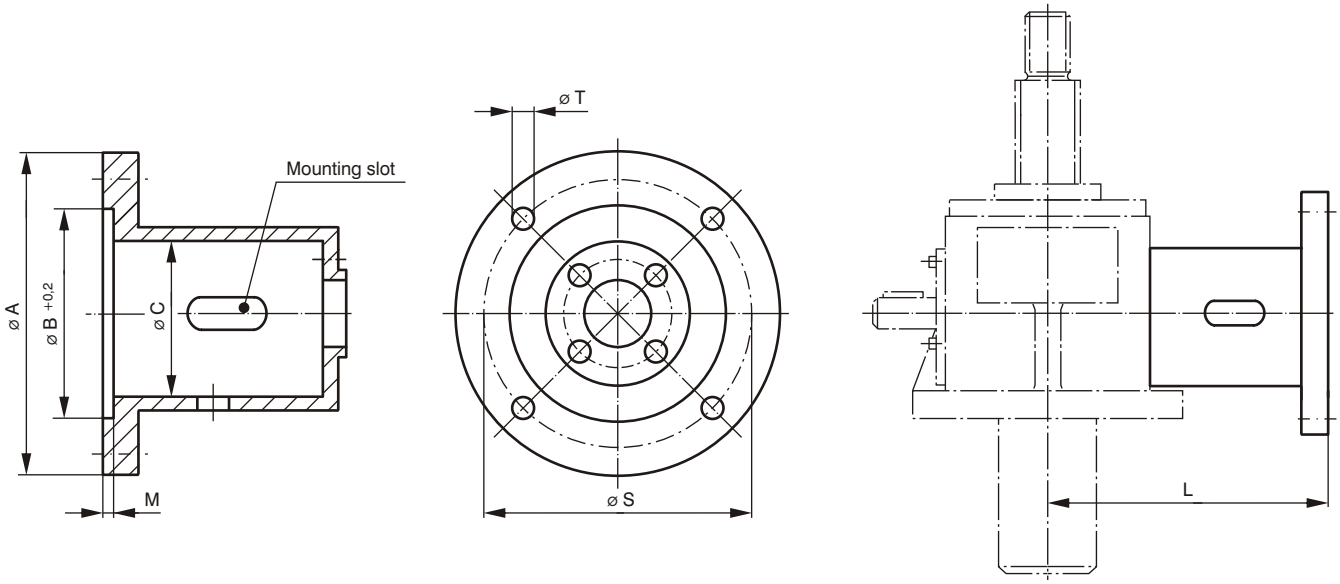

Ordering example:

Screw jack
Size 150
Motor adaptor
Flange diameter
IEC Motor frame size B14 design

SGT - 150 - MGA - 140 - M90

HK - Hand crank

ALBERT hand cranks for screw jacks are to DIN 468 with keyway to BS 4235.
Special materials such as those to resist rust and acid are available. Please enquire.

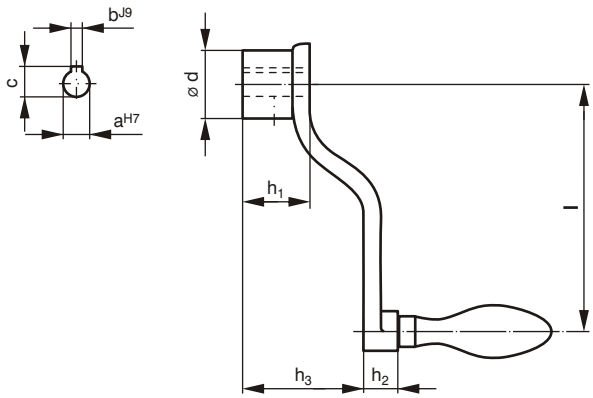

Ordering example:

Hand crank
Size

HKA - 30

Accessories for screw jacks type SGT

Order code	Coupling type	IEC Motor frame size B14 design	Dimensions [mm]							No. of poles	permissible motor weight [kg]	Material	Mass [kg]
			Flange diameter A	B	C	L	M	S	T				
SGT-5-MGA-090-M63	KP14	63	90	60	44	96	3	75	5,5	4	10	Steel	0,8
SGT-5-MGA-105-M71	KP14	71	105	70	44	103	3	85	6,6	4	10	Steel	1,0
SGT-20-MGA-120-M63	KP14	63	120	80	59	125	3,5	100	6,6	4	25	Steel	1,4
SGT-20-MGA-140-M71	KP14	71	140	95	59	132	4	115	9	4	25	Steel	1,8
SGT-20-MGA-120-M80	KP19/24	80	120	80	59	142	3,5	100	6,6	4/6	25	Steel	1,6
SGT-20-MGA-140-M90	KP19/24	90	140	95	59	152	4	115	9	4/6	25	Steel	2,1
SGT-20-MGA-160-M100	KP24/32	100	160	110	59	168	4	130	9	6/8	25	Steel	3,3
SGT-30-MGA-120-M63	KP14	63	120	80	59	125	3,5	100	6,6	4	25	Steel	1,3
SGT-30-MGA-140-M71	KP14	71	140	95	59	132	4	115	9	4	25	Steel	1,8
SGT-30-MGA-120-M80	KP19/24	80	120	80	59	142	3,5	100	6,6	4/6	25	Steel	1,6
SGT-30-MGA-140-M90	KP19/24	90	140	95	59	152	4	115	9	4/6	25	Steel	2,1
SGT-30-MGA-160-M100	KP24/32	100	160	110	59	171	4	130	9	6/8	25	Steel	3,3
SGT-50-MGA-120-M80	KP19/24	80	120	80	76	168	3,5	100	6,6	4/6	45	Steel	1,7
SGT-50-MGA-140-M90	KP19/24	90	140	95	76	178	4	115	9	4/6	45	Steel	2,2
SGT-50-MGA-160-M100	KP24/32	100	160	110	76	188	4	130	9	4/6/8	45	Steel	3,4
SGT-50-MGA-160-M112	KP24/32	112	160	110	76	188	4	130	9	4/6/8	45	Steel	3,4
SGT-50-MGA-200-M132	KP28/38	132	200	130	76	214	4	165	11	6/8	45	Steel	5,3
SGT-150-MGA-160-M80	KP19/24	80	160	110	84	195	4	130	9	4/6	75	Steel	2,5
SGT-150-MGA-140-M90	KP19/24	90	140	95	84	205	4	115	9	4/6	75	Steel	2,1
SGT-150-MGA-160-M100	KP24/32	100	160	110	84	215	4	130	9	4/6/8	75	Steel	3,3
SGT-150-MGA-160-M112	KP24/32	112	160	110	84	215	4	130	9	4/6/8	75	Steel	3,3
SGT-150-MGA-200-M132	KP28/38	132	200	130	84	235	4	165	11	4/6/8	75	Steel	5,2
SGT-150-MGA-250-M160	KP38/45	160	250	180	84	275	4,5	215	14	6/8	75	Steel	8,2
SGT-200-MGA-160-M100	KP24/32	100	160	110	100	239	4	130	9	4/6/8	90	Steel	3,1
SGT-200-MGA-160-M112	KP24/32	112	160	110	100	239	4	130	9	4/6/8	90	Steel	3,1
SGT-200-MGA-200-M132	KP28/38	132	200	130	100	259	4	165	11	4/6/8	90	Steel	5,0
SGT-200-MGA-250-M160	KP38/45	160	250	180	100	294	4,5	215	14	6/8	90	Steel	7,9
SGT-300-MGA-200-M132	KP28/38	132	200	130	114	278	4	165	11	4/6/8	110	Steel	5,2
SGT-300-MGA-250-M160	KP38/45	160	250	180	114	308	4,5	215	14	4/6/8	110	Steel	8,2
SGT-350-MGA-200-M132	KP28/38	132	200	130	143	317	4	165	11	4/6/8	130	Steel	6,2
SGT-350-MGA-250-M160	KP38/45	160	250	180	143	347	4,5	215	14	4/6/8	130	Steel	9,4

When ordering check with our engineers.

Order code	Dimensions [mm]							
	a	b	c	d	h_1	h_2	h_3	l
HK - 5	10	3	11,4	28	28	13	48	100
HK - 20	14	5	16,3	38	38	14	65	160
HK - 30	16	5	18,3	38	38	14	65	160
HK - 50	20	6	22,8	44	44	21	78	200
HK - 150	25	8	28,3	48	48	21	90	250
HK - 200	28	8	31,3	54	54	26	105	315

General tolerances to DIN ISO 2768 - medium

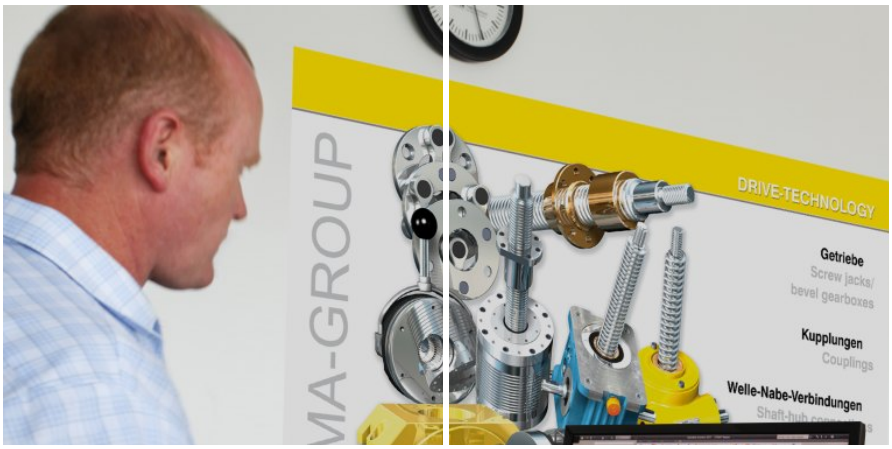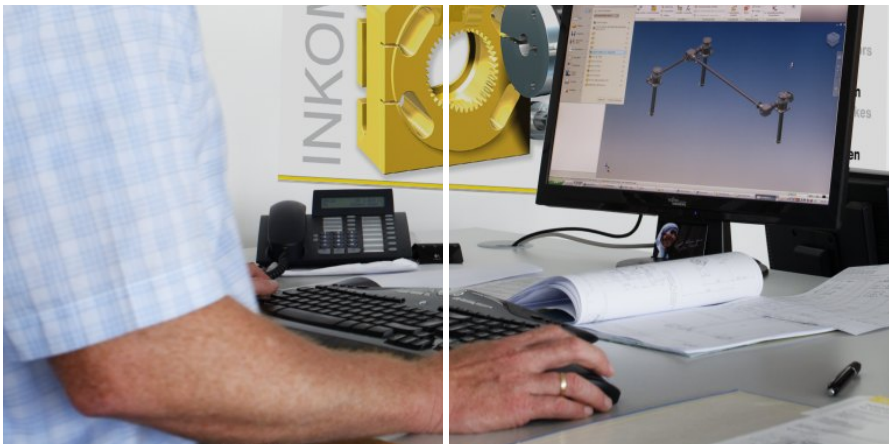
INKOMA-GROUP
DRIVE-TECHNOLOGY
Getriebe
Screw jacks/
bevel gearboxes
Kupplungen
Couplings
Welle-Nabe-Verbindungen