V-Belt Pulleys for Taper Bushes, 1 Groove

Material: cast iron EN-GJL200.

Taper V-belt pulleys similar to DIN 2211 or DIN 2217 matching narrow V-belts DIN 2215 und DIN 7753.

Design:
B = dished pulley
V = solid pulley

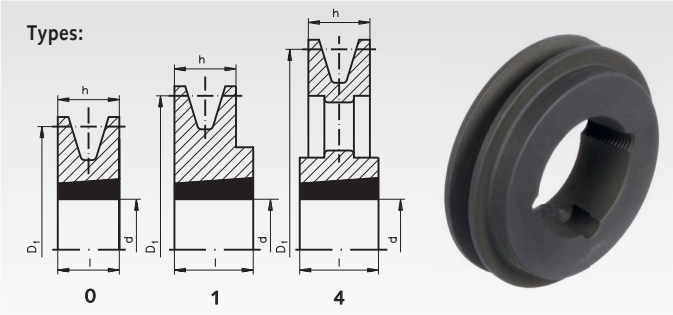

Ordering Details: e.g.: Product No. 151 106 00, V-Belt Pulley for Taper Clamping Bush, 1 Groove, Profile 10, Ø63 mm

Profile 10 and SPZ

Product No.	Nominal Ø D_1 mm	Design	Type	h mm	l mm	Relation of Hub to Rim	Bore d max. mm	Bush* No.	Weight approx. kg
151 106 00	63	V	1	16	22	one-sided projecting 6	28	1108	0,30
151 107 00	71	V	1	16	22	one-sided projecting 6	28	1108	0,40
151 108 00	80	V	1	16	25	one-sided projecting 9	32	1210	0,50
151 109 00	90	V	1	16	25	one-sided projecting 9	32	1210	0,70
151 110 00	100	V	1	16	25	one-sided projecting 9	32	1210	0,80
151 111 00	112	V	1	16	25	one-sided projecting 9	42	1610	1,00
151 112 00	125	V	1	16	25	one-sided projecting 9	42	1610	1,20
151 114 00	140	V	1	16	25	one-sided projecting 9	42	1610	1,60
151 116 00	160	V	1	16	25	one-sided projecting 9	42	1610	2,10
151 118 00	180	B	4	16	25	one-sided projecting 9	42	1610	1,80
151 120 00	200	B	4	16	32	one-sided projecting 16	50	2012	2,50
151 122 00	224	B	4	16	32	one-sided projecting 16	50	2012	2,80
151 125 00	250	B	4	16	32	projecting on both sides 8	50	2012	3,30
151 128 00	280	B	4	16	32	projecting on both sides 8	50	2012	3,80
151 131 00	315	B	4	16	32	projecting on both sides 8	50	2012	4,80

Profile 13 and SPA

Product No.	Nominal Ø D_1 mm	Design	Type	h mm	l mm	Relation of Hub to Rim	Bore d max. mm	Bush* No.	Weight approx. kg
153 107 00	71	V	1	20	22	one-sided projecting 2	28	1108	0,40
153 108 00	80	V	1	20	25	one-sided projecting 5	32	1210	0,53
153 109 00	90	V	1	20	25	one-sided projecting 5	32	1210	0,80
153 110 00	100	V	1	20	25	one-sided projecting 5	42	1610	0,90
153 111 00	112	V	1	20	25	one-sided projecting 5	42	1610	1,00
153 112 00	125	V	1	20	25	one-sided projecting 5	42	1610	1,30
153 114 00	140	V	1	20	25	one-sided projecting 5	42	1610	1,80
153 116 00	160	V	1	20	25	one-sided projecting 5	42	1610	2,20
153 118 00	180	B	4	20	25	one-sided projecting 5	42	1610	2,10
153 120 00	200	B	4	20	32	one-sided projecting 12	50	2012	2,80
153 122 00	224	B	4	20	32	one-sided projecting 12	50	2012	3,20
153 125 00	250	B	4	20	32	projecting on both sides 6	50	2012	3,70
153 128 00	280	B	4	20	32	one-sided projecting 12	50	2012	4,00
153 131 00	315	B	4	20	32	one-sided projecting 12	50	2012	4,60

Profile 17 and SPB

Product No.	Nominal Ø D_1 mm	Design	Type	h mm	l mm	Relation of Hub to Rim	Bore d max. mm	Bush* No.	Weight approx. kg
155 110 00	100	V	0	25	25	flush on both sides	42	1610	0,90
155 111 00	112	V	0	25	25	flush on both sides	42	1610	1,10
155 112 00	125	V	0	25	25	flush on both sides	42	1610	1,50
155 114 00	140	V	0	25	25	flush on both sides	42	1610	2,00
155 116 00	160	V	0	25	25	flush on both sides	42	1610	2,80
155 118 00	180	V	4	25	25	flush on both sides	42	1610	3,70
155 120 00	200	B	4	25	32	projecting on both sides 3.5	50	2012	4,10
155 122 00	224	B	4	25	32	projecting on both sides 3.5	50	2012	4,60
155 125 00	250	B	4	25	32	projecting on both sides 3.5	50	2012	5,60
155 128 00	280	B	4	25	32	projecting on both sides 3.5	50	2012	8,00

Matching Taper bushes see page 186.
Mounting instructions see page 824.

Other diameters or larger number of grooves at short notice, on request.

V-Belt Pulleys for Taper Bushes, 2 Grooves

Material: cast iron EN-GJL200.

Taper V-belt pulleys similar to DIN 2211 or DIN 2217 matching narrow V-belts DIN 2215 und DIN 7753.

Design:
A = spoked pulley
B = dished pulley
V = solid pulley

Ordering Details: e.g.: Product No. 151 206 00, V-Belt Pulley for Taper Clamping Bush, 2 Grooves, Profile 10, Ø63 mm

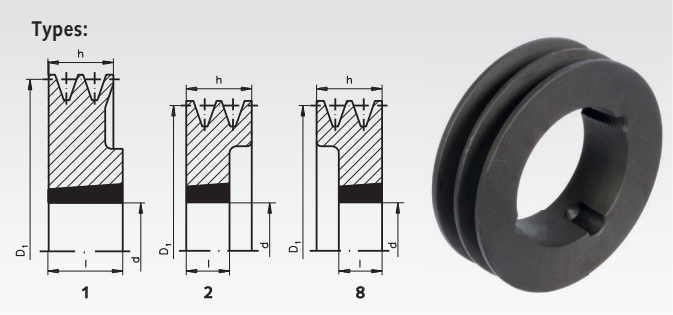

Profile 10 and SPZ

Product No.	Nominal Ø D_1 mm	Design	Type	h mm	l mm	Relation of Hub to Rim	Bore d max. mm	Bush* No.	Weight approx. kg
151 206 00	63	V	8	28	22	one-sided set back 6	28	1108	0,45
151 207 00	71	V	8	28	22	one-sided set back 6	28	1108	0,48
151 208 00	80	V	8	28	25	one-sided set back 3	32	1210	0,57
151 209 00	90	V	8	28	25	one-sided set back 3	42	1610	0,67
151 210 00	100	V	8	28	25	one-sided set back 3	42	1610	0,94
151 211 00	112	V	8	28	25	one-sided set back 3	42	1610	1,30
151 212 00	125	V	8	28	25	one-sided set back 3	42	1610	1,80
151 214 00	140	V	8	28	25	one-sided set back 3	42	1610	2,40
151 216 00	160	V	1	28	32	one-sided projecting 4	50	2012	3,10
151 218 00	180	B	1	28	32	one-sided projecting 4	50	2012	2,70
151 220 00	200	B	1	28	32	one-sided projecting 4	50	2012	3,10
151 222 00	224	B	1	28	32	one-sided projecting 4	50	2012	3,40
151 225 00	250	A	1	28	32	projecting on both sides 2	50	2012	3,90
151 228 00	280	A	1	28	32	projecting on both sides 2	50	2012	4,90

Profile 13 and SPA

Product No.	Nominal Ø D_1 mm	Design	Type	h mm	l mm	Relation of Hub to Rim	Bore d max. mm	Bush* No.	Weight approx. kg
153 207 00	71	V	8	35	22	one-sided set back 13	28	1108	0,55
153 208 00	80	V	8	35	25	one-sided set back 10	32	1210	0,74
153 209 00	90	V	8	35	25	one-sided set back 10	42	1610	0,90
153 210 00	100	V	8	35	25	one-sided set back 10	42	1610	1,00
153 211 00	112	V	8	35	25	one-sided set back 10	42	1610	1,40
153 212 00	125	V	8	35	25	one-sided set back 10	42	1610	1,90
153 214 00	140	V	8	35	32	one-sided set back 3	50	2012	2,60
153 216 00	160	V	8	35	32	one-sided set back 3	50	2012	3,20
153 218 00	180	B	1	35	32	set back on both sides 1.5	50	2012	5,20
153 220 00	200	B	1	35	45	projecting on both sides 5	60	2517	4,70
153 222 00	224	B	1	35	45	one-sided projecting 10	60	2517	5,30
153 225 00	250	B	1	35	45	projecting on both sides 5	60	2517	5,80
153 228 00	280	B	1	35	45	one-sided projecting 10	60	2517	6,50
153 231 00	315	B	1	35	45	one-sided projecting 10	60	2517	7,60

Profile 17 and SPB

Product No.	Nominal Ø D_1 mm	Design	Type	h mm	l mm	Relation of Hub to Rim	Bore d max. mm	Bush* No.	Weight approx. kg
155 210 00	100	V	8	44	25	one-sided set back 19	42	1610	1,2
155 211 00	112	V	8	44	25	one-sided set back 19	42	1610	1,5
155 212 00	125	V	2	44	32	one-sided set back 12	50	2012	2,0
155 214 00	140	V	2	44	32	one-sided set back 12	50	2012	2,7
155 216 00	160	V	8	44	32	one-sided set back 12	50	2012	3,9
155 218 00	180	V	1	44	45	one-sided projecting 1	60	2517	5,5
155 220 00	200	V	1	44	45	one-sided projecting 1	60	2517	7,5
155 222 00	224	B	1	44	45	one-sided projecting 1	60	2517	6,6
155 225 00	250	B	1	44	45	one-sided projecting 1	60	2517	7,7
155 228 00	280	B	1	44	45	one-sided projecting 1	60	2517	9,5
155 231 00	315	B	1	44	45	one-sided projecting 1	60	2517	11,5

Matching Taper bushes see page 186.
Mounting instructions see page 824.

Other diameters or larger number of grooves at short notice, on request.

V-Belt Pulleys for Taper Bushes, 3 Grooves

Material: cast iron EN-GJL200.

Taper V-belt pulleys similar to DIN 2211 or DIN 2217 matching narrow V-belts DIN 2215 und DIN 7753.

Design:
A = spoked pulley
B = dished pulley
V = solid pulley

Ordering Details: e.g.: Product No. 151 306 00, V-Belt Pulley for Taper Clamping Bush, 3 Grooves, Profile 10, Ø63 mm

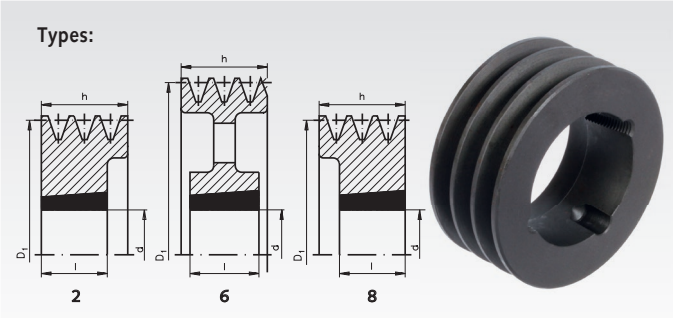

Profile 10 and SPZ

Product No.	Nominal Ø D_1 mm	Design	Type	h mm	l mm	Relation of Hub to Rim	Bore d max. mm	Bush* No.	Weight approx. kg
151 306 00	63	V	8	40	22	one-sided set back 18	28	1108	0,58
151 307 00	71	V	8	40	22	one-sided set back 18	28	1108	0,64
151 308 00	80	V	8	40	25	one-sided set back 15	32	1210	0,75
151 309 00	90	V	8	40	25	one-sided set back 15	42	1610	0,88
151 310 00	100	V	8	40	25	one-sided set back 15	42	1610	1,20
151 311 00	112	V	8	40	32	one-sided set back 8	50	2012	1,40
151 312 00	125	V	2	40	32	one-sided set back 8	50	2012	2,00
151 314 00	140	V	2	40	32	one-sided set back 8	50	2012	2,70
151 316 00	160	V	2	40	32	one-sided set back 8	50	2012	3,90
151 318 00	180	B	6	40	32	one-sided set back 8	50	2012	3,20
151 320 00	200	B	6	40	32	set back on both sides 4	50	2012	3,70
151 322 00	224	B	6	40	32	set back on both sides 4	50	2012	4,20
151 325 00	250	B	6	40	32	set back on both sides 4	50	2012	4,80
151 328 00	280	A	6	40	45	projecting on both sides 2.5	60	2517	7,10
151 331 00	315	A	6	40	45	projecting on both sides 2.5	60	2517	7,50

Profile 13 and SPA

Product No.	Nominal Ø D_1 mm	Design	Type	h mm	l mm	Relation of Hub to Rim	Bore d max. mm	Bush* No.	Weight approx. kg
153 308 00	80	V	8	50	25	one-sided set back 25	32	1210	0,82
153 309 00	90	V	8	50	25	one-sided set back 25	42	1610	1,0
153 310 00	100	V	2	50	25	one-sided set back 25	42	1610	1,4
153 311 00	112	V	8	50	32	one-sided set back 18	50	2012	1,6
153 312 00	125	V	2	50	32	one-sided set back 18	50	2012	2,3
153 314 00	140	V	8	50	45	one-sided set back 5	60	2517	2,9
153 316 00	160	V	8	50	45	one-sided set back 5	60	2517	3,8
153 318 00	180	V	8	50	45	one-sided set back 5	60	2517	6,1
153 320 00	200	B	6	50	45	set back on both sides 2.5	60	2517	5,5
153 322 00	224	B	6	50	45	set back on both sides 2.5	60	2517	6,2
153 325 00	250	B	6	50	45	set back on both sides 2.5	60	2517	6,8
153 328 00	280	B	6	50	45	set back on both sides 2.5	60	2517	7,6
153 331 00	315	A	6	50	51	projecting on both sides 0.5	75	3020	11,0

Profile 17 and SPB

Product No.	Nominal Ø D_1 mm	Design	Type	h mm	l mm	Relation of Hub to Rim	Bore d max. mm	Bush* No.	Weight approx. kg
155 310 00	100	V	8	63	25	one-sided set back 38	42	1610	1,7
155 311 00	112	V	8	63	25	one-sided set back 38	42	1610	2,0
155 312 00	125	V	2	63	32	one-sided set back 31	50	2012	2,7
155 314 00	140	V	2	63	32	one-sided set back 31	50	2012	3,5
155 316 00	160	V	2	63	45	one-sided set back 18	60	2517	4,8
155 318 00	180	V	2	63	45	one-sided set back 18	60	2517	6,6
155 320 00	200	V	2	63	45	one-sided set back 18	60	2517	8,6
155 322 00	224	B	6	63	45	one-sided set back 18	60	2517	8,1
155 325 00	250	B	6	63	51	one-sided set back 12	75	3020	11,0
155 328 00	280	B	6	63	51	set back on both sides 6	75	3020	13,0
155 331 00	315	B	6	63	51	set back on both sides 6	75	3020	15,5

Matching Taper bushes see page 186.
Mounting instructions see page 824.

Other diameters or larger number of grooves at short notice, on request.

Taper Bushes

Material: GG20.
Bores ISO E8, feather keyways in accordance with DIN 6885/1.
Screws included in delivery.

Shaft tolerance +0.05/-0.125 mm.
Can be used with or without parallel key, depending on the required torque.

Other bush sizes and bores available at short notice (some in stock).

Assembly instructions see page 824.

Ordering Details: e.g.: Product No. 622 501 10, Taper Bush 1008, 10 mm Bore

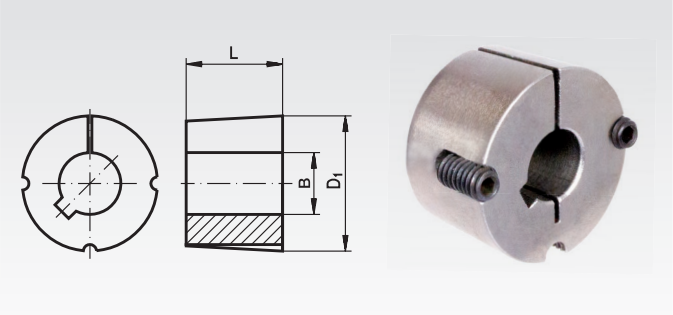

Product No.	Taper bush type	Bore B mm	Key-way mm	L mm	D_1 mm	Weight g
622 501 10	1008	10	3	22,3	35,0	160
622 501 11	1008	11	4	22,3	35,0	140
622 501 12	1008	12	4	22,3	35,0	120
622 501 14	1008	14	5	22,3	35,0	118
622 501 15	1008	15	5	22,3	35,0	116
622 501 16	1008	16	5	22,3	35,0	112
622 501 18	1008	18	6	22,3	35,0	100
622 501 19	1008	19	6	22,3	35,0	98
622 501 20	1008	20	6	22,3	35,0	94
622 501 22	1008	22	6	22,3	35,0	80
622 501 24[1)]	1008	24	8[1)]	22,3	35,0	70
622 501 25[1)]	1008	25	8[1)]	22,3	35,0	68
622 502 10	1108	10	3	22,3	38,0	180
622 502 11	1108	11	4	22,3	38,0	165
622 502 12	1108	12	4	22,3	38,0	154
622 502 14	1108	14	5	22,3	38,0	148
622 502 16	1108	16	5	22,3	38,0	140
622 502 18	1108	18	6	22,3	38,0	132
622 502 19	1108	19	6	22,3	38,0	126
622 502 20	1108	20	6	22,3	38,0	122
622 502 22	1108	22	6	22,3	38,0	112
622 502 24	1108	24	8	22,3	38,0	96
622 502 25	1108	25	8	22,3	38,0	92
622 502 28[1)]	1108	28	8[1)]	22,3	38,0	88
622 503 10	1210	10	3	25,4	47,0	282
622 503 11	1210	11	4	25,4	47,0	280
622 503 12	1210	12	4	25,4	47,0	278
622 503 14	1210	14	5	25,4	47,0	274
622 503 16	1210	16	5	25,4	47,0	262
622 503 18	1210	18	6	25,4	47,0	250
622 503 19	1210	19	6	25,4	47,0	244
622 503 20	1210	20	6	25,4	47,0	240
622 503 22	1210	22	6	25,4	47,0	224
622 503 24	1210	24	8	25,4	47,0	208
622 503 25	1210	25	8	25,4	47,0	208
622 503 28	1210	28	8	25,4	47,0	184
622 503 30	1210	30	8	25,4	47,0	168
622 503 32	1210	32	10	25,4	47,0	160
622 513 14	1215	14	5	38,1	47,0	380
622 513 16	1215	16	5	38,1	47,0	370
622 513 18	1215	18	6	38,1	47,0	350
622 513 19	1215	19	6	38,1	47,0	340
622 513 20	1215	20	6	38,1	47,0	335
622 513 22	1215	22	6	38,1	47,0	320
622 513 24	1215	24	8	38,1	47,0	290
622 513 25	1215	25	8	38,1	47,0	285
622 513 28	1215	28	8	38,1	47,0	260
622 513 30	1215	30	8	38,1	47,0	230
622 513 32	1215	32	10	38,1	47,0	200

Product No.	Taper bush type	Bore B mm	Key-way mm	L mm	D_1 mm	Weight g
622 504 12	1610	12	4	25,4	57,0	416
622 504 14	1610	14	5	25,4	57,0	412
622 504 15	1610	15	5	25,4	57,0	408
622 504 16	1610	16	5	25,4	57,0	402
622 504 18	1610	18	6	25,4	57,0	390
622 504 19	1610	19	6	25,4	57,0	380
622 504 20	1610	20	6	25,4	57,0	373
622 504 22	1610	22	6	25,4	57,0	366
622 504 24	1610	24	8	25,4	57,0	356
622 504 25	1610	25	8	25,4	57,0	348
622 504 28	1610	28	8	25,4	57,0	324
622 504 30	1610	30	8	25,4	57,0	304
622 504 32	1610	32	10	25,4	57,0	280
622 504 35	1610	35	10	25,4	57,0	264
622 504 38	1610	38	10	25,4	57,0	240
622 504 40	1610	40	12	25,4	57,0	210
622 504 42	1610	42	12	25,4	57,0	200
622 508 20	1615	20	6	38,1	57,0	552
622 508 22	1615	22	6	38,1	57,0	540
622 508 24	1615	24	8	38,1	57,0	520
622 508 25	1615	25	8	38,1	57,0	510
622 508 30	1615	30	8	38,1	57,0	446
622 508 32	1615	32	10	38,1	57,0	414
622 508 35	1615	35	10	38,1	57,0	380
622 508 38	1615	38	10	38,1	57,0	346
622 508 40	1615	40	12	38,1	57,0	340
622 508 42[2)]	1615	42	12[2)]	38,1	57,0	260
622 505 12	2012	12	4	31,8	70,0	810
622 505 14	2012	14	5	31,8	70,0	800
622 505 15	2012	15	5	31,8	70,0	785
622 505 16	2012	16	5	31,8	70,0	770
622 505 18	2012	18	6	31,8	70,0	762
622 505 19	2012	19	6	31,8	70,0	756
622 505 20	2012	20	6	31,8	70,0	750
622 505 22	2012	22	6	31,8	70,0	736
622 505 24	2012	24	8	31,8	70,0	724
622 505 25	2012	25	8	31,8	70,0	714
622 505 28	2012	28	8	31,8	70,0	684
622 505 30	2012	30	8	31,8	70,0	658
622 505 32	2012	32	10	31,8	70,0	630
622 505 35	2012	35	10	31,8	70,0	604
622 505 38	2012	38	10	31,8	70,0	566
622 505 40	2012	40	12	31,8	70,0	538
622 505 42	2012	42	12	31,8	70,0	510
622 505 45	2012	45	14	31,8	70,0	460
622 505 48	2012	48	14	31,8	70,0	404
622 505 50	2012	50	14	31,8	70,0	372

[1)] With flat keyway 1.3mm.
[2)] With flat keyway 2.2mm.

Taper Bushes

Material: GG20.
Bores ISO E8, feather keyways in accordance with DIN 6885/1.
Screws included in delivery.

Shaft tolerance +0.05/-0.125 mm.
Can be used with or without parallel key, depending on the required torque.

Other bush sizes and bores available at short notice (some in stock).

Ordering Details: e.g.: Product No. 622 506 16, Taper Bush 2517, 16 mm Bore

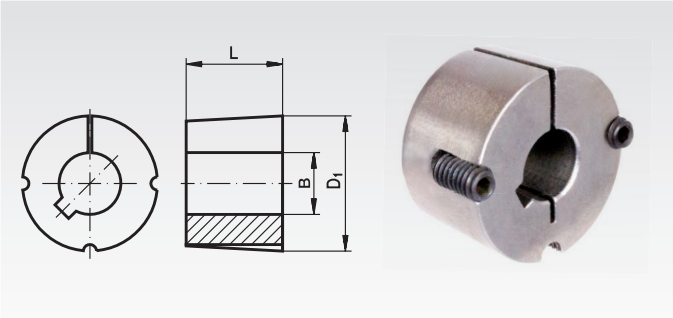

Product No.	Taper bush type	Bore B mm	Key-way mm	L mm	D_1 mm	Weight g
622 506 16	2517	16	5	44,5	85,0	1800
622 506 18	2517	18	6	44,5	85,0	1700
622 506 19	2517	19	6	44,5	85,0	1620
622 506 20	2517	20	6	44,5	85,0	1602
622 506 22	2517	22	6	44,5	85,0	1568
622 506 24	2517	24	8	44,5	85,0	1566
622 506 25	2517	25	8	44,5	85,0	1556
622 506 28	2517	28	8	44,5	85,0	1520
622 506 30	2517	30	8	44,5	85,0	1488
622 506 32	2517	32	10	44,5	85,0	1450
622 506 35	2517	35	10	44,5	85,0	1396
622 506 38	2517	38	10	44,5	85,0	1346
622 506 40	2517	40	12	44,5	85,0	1316
622 506 42	2517	42	12	44,5	85,0	1274
622 506 45	2517	45	14	44,5	85,0	1204
622 506 48	2517	48	14	44,5	85,0	1126
622 506 50	2517	50	14	44,5	85,0	1080
622 506 55	2517	55	16	44,5	85,0	958
622 506 60	2517	60	18	44,5	85,0	810
622 506 65[1)]	2517	65	18[1)]	44,5	85,0	650
622 507 25	3020	25	8	50,8	108,0	2910
622 507 28	3020	28	8	50,8	108,0	2790
622 507 30	3020	30	8	50,8	108,0	2840
622 507 32	3020	32	10	50,8	108,0	2800
622 507 35	3020	35	10	50,8	108,0	2745
622 507 38	3020	38	10	50,8	108,0	2700
622 507 40	3020	40	12	50,8	108,0	2635
622 507 42	3020	42	12	50,8	108,0	2594
622 507 45	3020	45	14	50,8	108,0	2515
622 507 48	3020	48	14	50,8	108,0	2425
622 507 50	3020	50	14	50,8	108,0	2370
622 507 55	3020	55	16	50,8	108,0	2234
622 507 60	3020	60	18	50,8	108,0	2000
622 507 65	3020	65	18	50,8	108,0	1888
622 507 70	3020	70	20	50,8	108,0	1700
622 507 75	3020	75	20	50,8	108,0	1485

Product No.	Taper bush type	Bore B mm	Key-way mm	L mm	D_1 mm	Weight g
622 511 40	3030	40	12	76,2	108,0	3820
622 511 45	3030	45	14	76,2	108,0	3550
622 511 50	3030	50	14	76,2	108,0	3420
622 511 60	3030	60	18	76,2	108,0	2950
622 511 65	3030	65	18	76,2	108,0	2680
622 511 70	3030	70	20	76,2	108,0	2060
622 511 75	3030	75	20	76,2	108,0	1640
622 509 35	3525	35	10	64,9	127,0	4910
622 509 38	3525	38	10	64,9	127,0	4850
622 509 40	3525	40	12	64,9	127,0	4800
622 509 50	3525	50	14	64,9	127,0	4440
622 509 60	3525	60	18	64,9	127,0	4050
622 509 75	3525	75	20	64,9	127,0	3370
622 509 80	3525	80	22	64,9	127,0	3050
622 510 50	3535	50	14	88,9	127,0	6050
622 510 55	3535	55	16	88,9	127,0	5810
622 510 60	3535	60	18	88,9	127,0	5500
622 510 65	3535	65	18	88,9	127,0	5200
622 510 70	3535	70	20	88,9	127,0	4880
622 510 75	3535	75	20	88,9	127,0	4460
622 510 80	3535	80	22	88,9	127,0	4080
622 510 90	3535	90	25	88,9	127,0	3210

[1)] With flat keyway 3.3mm.

Other bush sizes on request.

Assembly Instructions Page 824

Spare screws for Taper Bushes

Material: Steel.

Supply: One screw (order quantity as needed).

Taper bushes have two or (from size 3030) three screws depending on size.

Ordering Details: e.g.: Product No. 622 501 99, Spare Screw , Taper Bush 1008 and 1108

Product No.	to match Taper bush	Size inch	Screw type	Tightening Torque Nm	Weight g
622 501 99	1008 and 1108	1/4''	Set screw with internal hexagon	5.6	1.9
622 503 99	1210 to 1615	3/8''	Set screw with internal hexagon	20	5.2
622 505 99	2012 and 2017	7/16''	Set screw with internal hexagon	30	11
622 506 99	2517 and 2525	1/2''	Set screw with internal hexagon	50	16.4
622 507 99	3020 and 3030	5/8''	Set screw with internal hexagon	90	33.2
622 510 99	3525 and 3535	1/2''	Screw with internal hexagon	90	49.7

V-Belt Pulleys Made from a Special Light Alloy with Cast-Iron core, 1 Groove

Bimetal V-belt pulleys similar to DIN 2211 or DIN 2217 matching narrow V-belts DIN 2215 und DIN 7753.

V-pelt pulleys with nominal diameters up to and including 250 mm
are supplied as solid pulley, from 280 mm Ø as spoked pulley.

[1] Can only be used with standard V-belt DIN 2215 .
* Without cast-iron core.

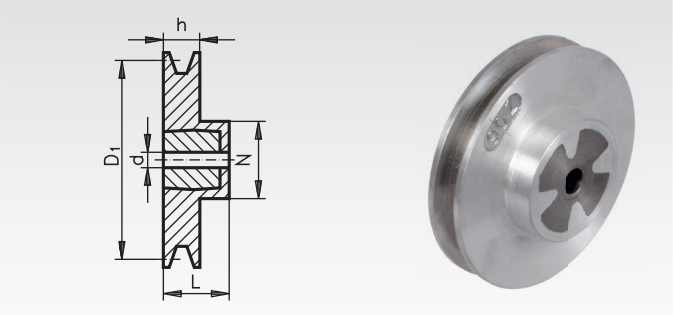

Ordering Details: e.g.: Product No. 150 101 00,
V-Belt Pulley Bi-metal, 1 Groove, 40/1/10

Profile Z (10) and SPZ with 1 Groove, Rim Width h 16 mm

Product No.	Nominal Ø D_1 mm	Pilot Hole d approx. mm	max. Bore mm	Hub Ø N approx. mm	Hub Length L approx. mm	Weight approx. kg
150 102 00	*50 [1]	-	22	35	28	0,1
150 103 00	*56 [1]	-	22	35	28	0,1
150 106 00	*63	-	22	35	28	0,1
150 107 00	*71	-	25	40	28	0,2
150 108 00	80	10	28	48	28	0,4
150 109 00	90	10	28	48	28	0,5
150 110 00	100	10	28	48	28	0,5
150 111 00	112	10	28	48	28	0,5
150 112 00	125	10	28	48	28	0,5
150 114 00	140	10	28	48	28	0,6
150 116 00	160	12	35	60	32	0,9
150 118 00	180	12	35	60	32	1,0
150 120 00	200	12	35	60	32	1,1
150 122 00	224	12	35	60	32	1,2
150 125 00	250	12	35	60	32	1,5
150 128 00	280	12	35	60	40	1,7
150 131 00	315	14	40	65	40	2,0

Profile A (13) and SPA with 1 Groove, Rim Width h 20 mm

Product No.	Nominal Ø D_1 mm	Pilot Hole d approx. mm	max. Bore mm	Hub Ø N approx. mm	Hub Length L approx. mm	Weight approx. kg
152 102 00	*50 [1]	-	22	35	28	0,1
152 103 00	*56 [1]	-	22	35	28	0,15
152 106 00	*63	-	25	40	28	0,15
152 107 00	*71	-	25	40	28	0,2
152 108 00	80	10	28	48	28	0,4
152 109 00	90	10	28	48	28	0,5
152 110 00	100	10	28	48	28	0,5
152 111 00	112	10	28	48	28	0,5
152 112 00	125	10	35	60	28	0,7
152 114 00	140	10	35	60	32	0,8
152 116 00	160	12	35	60	40	1,0
152 118 00	180	12	40	65	40	1,3
152 120 00	200	12	40	65	40	1,4
152 122 00	224	12	40	65	40	1,5
152 125 00	250	12	45	75	50	2,2
152 128 00	280	12	45	75	50	2,4
152 131 00	315	12	45	75	50	2,8

V-Belt Pulleys GG in Taper bushes-Type see page 183.

Profile B (17) and SPB with 1 Groove, Rim Width h 25 mm

Product No.	Nominal Ø D_1 mm	Pilot Hole d approx. mm	max. Bore mm	Hub Ø N approx. mm	Hub Length L approx. mm	Weight approx. kg
154 106 00	*63 [1]	-	25	40	32	0,2
154 107 00	*71	-	25	40	32	0,25
154 108 00	80	10	35	60	32	0,5
154 109 00	90	10	35	60	32	0,6
154 110 00	100	12	35	60	32	0,7
154 111 00	112	12	35	60	32	0,7
154 112 00	125	12	35	60	32	0,8
154 114 00	140	12	35	60	32	0,9
154 116 00	160	12	35	60	40	1,1
154 118 00	180	12	40	65	40	1,4
154 120 00	200	12	40	65	40	1,5
154 122 00	224	12	40	65	45	1,9
154 125 00	250	12	45	75	45	2,3
154 128 00	280	14	45	75	45	2,4
154 131 00	315	20	45	75	45	2,7

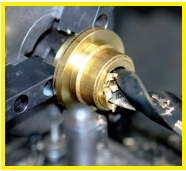

Reworking within 24h-service possible. Custom made parts on request.

V-Belt Pulleys Made from a Special Light Alloy with Cast-Iron core, 2 Grooves

Bimetal V-belt pulleys similar to DIN 2211 or DIN 2217 matching narrow V-belts DIN 2215 und DIN 7753.

V-belt pulleys with nominal diameters up to and including 250 mm are supplied as solid pulley, from 280 mm Ø as spoked pulley.

[1] Can only be used with standard V-belt DIN 2215 .
* Without cast-iron core.

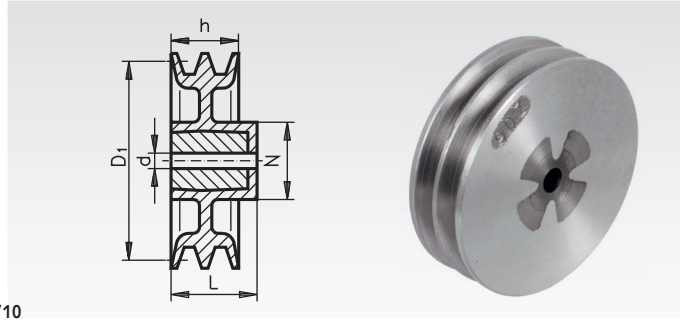

Ordering Details: e.g.: Product No. 150 202 00, V-Belt Pulley Bi-metal, 2 Grooves, 50/2/10

Profile Z (10) and SPZ with 2 Grooves, Rim Width h 28 mm

Product No.	Nominal Ø D_1 mm	Pilot Hole d approx. mm	max. Bore mm	Hub Ø N approx. mm	Hub Length L approx. mm	Weight approx. kg
150 202 00	*50 [1]	-	22	35	35	0,15
150 203 00	*56 [1]	-	22	35	35	0,15
150 206 00	*63	-	25	40	35	0,2
150 207 00	*71	-	25	40	35	0,3
150 208 00	80	10	28	-	28	0,5
150 209 00	90	10	28	-	28	0,6
150 210 00	100	10	28	-	28	0,7
150 211 00	112	10	35	60	32	0,8
150 212 00	125	10	35	60	32	0,8
150 214 00	140	12	35	60	40	1,0
150 216 00	160	12	35	60	40	1,2
150 218 00	180	12	40	65	40	1,5
150 220 00	200	12	40	65	40	1,6
150 222 00	224	12	40	65	40	1,7
150 225 00	250	12	40	65	40	2,1
150 228 00	280	12	40	65	45	2,4
150 231 00	315	14	45	75	45	2,7

Profile A (13) and SPA with 2 Grooves, Rim Width h 35 mm

Product No.	Nominal Ø D_1 mm	Pilot Hole d approx. mm	max. Bore mm	Hub Ø N approx. mm	Hub Length L approx. mm	Weight approx. kg
152 202 00	*50 [1]	-	22	-	35	0,15
152 203 00	*56 [1]	-	22	-	35	0,2
152 206 00	*63	-	25	40	45	0,25
152 207 00	*71	-	28	48	45	0,35
152 208 00	80	10	35	60	45	0,7
152 209 00	90	10	35	60	45	0,8
152 210 00	100	10	35	60	45	0,9
152 211 00	112	12	35	60	45	1,0
152 212 00	125	12	35	60	45	1,0
152 214 00	140	12	35	60	45	1,2
152 216 00	160	12	40	65	45	1,5
152 218 00	180	12	40	65	45	1,7
152 220 00	200	12	40	65	50	1,9
152 222 00	224	12	40	65	50	2,2
152 225 00	250	14	45	75	50	2,8
152 228 00	280	14	45	75	50	2,9
152 231 00	315	14	45	75	50	3,2

V-Belt Pulleys GG in Taper bushes-Type see page 183.

Profile B (17) and SPB with 2 Grooves, Rim Width h 44 mm

Product No.	Nominal Ø D_1 mm	Pilot Hole d approx. mm	max. Bore mm	Hub Ø N approx. mm	Hub Length L approx. mm	Weight approx. kg
154 207 00	*71	-	28	48	44	0,4
154 208 00	80	10	35	60	44	0,7
154 209 00	90	12	35	60	44	0,8
154 210 00	100	12	40	65	44	1,1
154 211 00	112	12	40	65	44	1,3
154 212 00	125	12	40	65	44	1,4
154 214 00	140	12	40	65	44	1,4
154 216 00	160	12	45	75	44	2,0
154 218 00	180	12	45	75	50	2,2
154 220 00	200	14	45	75	50	2,4
154 222 00	224	14	45	75	50	2,8
154 225 00	250	16	45	75	50	2,9
154 228 00	280	16	50	85	50	3,5
154 231 00	315	20	50	85	60	4,3

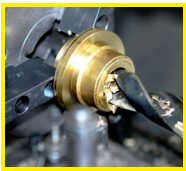

Reworking within 24h-service possible. Custom made parts on request.

V-Belt Pulley Made from a Special Light Alloy with Cast-Iron core, 3 Grooves

Bimetal V-belt pulleys similar to DIN 2211 or DIN 2217 matching narrow V-belts DIN 2215 und DIN 7753.

V-belt pulleys with nominal diameters up to and including 250 mm are supplied as solid pulley, from 280 mm Ø as spoked pulley.

1) Can only be used with standard V-belt DIN 2215 .
* Without cast-iron core.

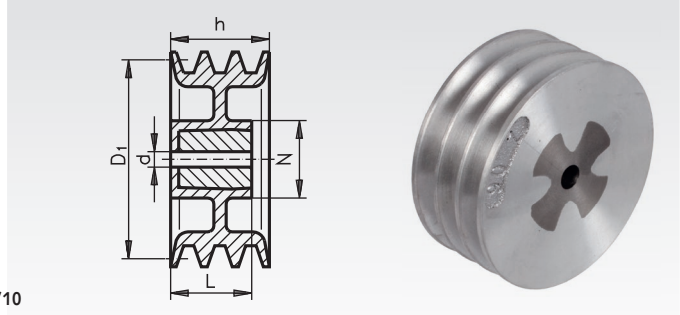

Ordering Details: e.g.: Product No. 150 306 00, V-Belt Pulley Bi-metal, 3 Grooves, 63/3/10

Profile Z (10) and SPZ with 3 Grooves, Rim Width h 40 mm

Product No.	Nominal Ø D_1 mm	Pilot Hole d approx. mm	max. Bore mm	Hub Ø N approx. mm	Hub Length L approx. mm	Weight kg
150 306 00	*63	-	25	-	40	0,3
150 307 00	*71	-	30	-	40	0,4
150 308 00	80	10	35	-	40	0,8
150 309 00	90	10	35	-	40	0,9
150 310 00	100	10	35	60	40	1,0
150 311 00	112	12	35	-	40	1,2
150 312 00	125	12	35	60	40	1,1
150 314 00	140	12	40	65	40	1,5
150 316 00	160	12	40	65	45	1,5
150 318 00	180	12	45	75	45	2,0
150 320 00	200	14	45	75	45	2,2
150 322 00	224	14	45	75	45	2,4
150 325 00	250	14	45	75	45	2,7
150 328 00	280	14	45	75	50	3,0
150 331 00	315	14	45	75	50	4,0

Profile A (13) and SPA with 3 Grooves, Rim Width h 50 mm

Product No.	Nominal Ø D_1 mm	Pilot Hole d approx. mm	max. Bore mm	Hub Ø N approx. mm	Hub Length L approx. mm	Weight kg
152 302 00	*50 1)	-	22	-	50	0,2
152 303 00	*56 1)	-	25	-	50	0,3
152 306 00	*63	-	25	-	50	0,3
152 307 00	*71	-	30	-	50	0,4
152 308 00	80	12	35	-	50	0,8
152 309 00	90	12	40	-	50	1,1
152 310 00	100	12	40	-	50	1,3
152 311 00	112	12	40	-	50	1,5
152 312 00	125	12	40	65	50	1,8
152 314 00	140	12	40	65	50	1,7
152 316 00	160	12	40	65	50	1,9
152 318 00	180	14	45	75	50	2,4
152 320 00	200	14	45	75	50	2,6
152 322 00	224	16	45	75	50	2,8
152 325 00	250	16	50	85	50	3,5
152 328 00	280	16	50	85	50	3,6
152 331 00	315	16	50	85	60	4,5

V-Belt Pulleys GG in Taper bushes-Type see page 183.

Profile B (17) and SPB with 3 Grooves, Rim Width h 63 mm

Product No.	Nominal Ø D_1 mm	Pilot Hole d approx. mm	max. Bore mm	Hub Ø N approx. mm	Hub Length L approx. mm	Weight kg
154 308 00	80	12	35	-	63	0,9
154 309 00	90	12	35	-	63	1,2
154 310 00	100	14	40	-	63	1,4
154 311 00	112	14	40	-	63	2,0
154 312 00	125	14	40	-	63	2,3
154 314 00	140	14	45	-	63	2,4
154 316 00	160	14	50	85	50	2,6
154 318 00	180	14	50	85	50	2,8
154 320 00	200	16	50	85	50	3,0
154 322 00	224	16	50	85	50	3,4
154 325 00	250	18	50	85	60	4,3
154 328 00	280	18	50	85	60	4,6
154 331 00	315	20	50	85	60	4,9

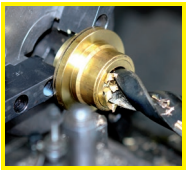

Reworking within 24h-service possible. Custom made parts on request.

V-Belt Tensioner with Mounted V-Belt Pulley

Material: Housings up to Ø 78 mm made from sintered steel, over Ø 78 mm made from grey cast iron GG20.
Lever St52, V-belt pulley cast steel.

Matching narrow V-belts DIN 2215 und DIN 7753.

Pulley with sealed ball bearings, permanently lubricated.

Measur A of the pulley can be adjusted by distance-washers on the axis, which is screwed onto the tensioner.

Can be used for both tensioning directions.

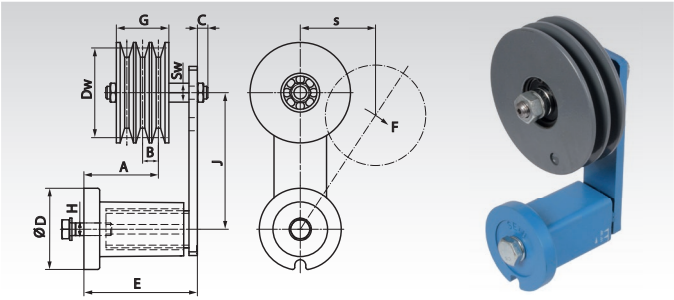

Ordering Details: e.g.: Product No. 140 850 01, SPZ, 1 Groove, Dw=90mm

Product No.	Profile	No. of Grooves	Dw mm	Tensioner Size	$F_{max.}$ N	$Speed_{max.}$ min^{-1}	$s_{max.}$ mm	A mm	B mm	C mm	Ø D mm	E mm	J mm	G mm	H mm	sw mm	Weight kg
140 851 01	SPZ (10)	1	90	2	350	10000	50	20-43	12	13	58	79	100	16	M10	19	2,0
140 851 02	SPZ (10)	2	90	2	350	10000	50	31-48	12	13	58	79	100	28	M10	19	2,3
140 851 03	SPZ (10)	3	90	2	350	10000	50	31-37	12	13	58	79	100	40	M10	19	2,6
140 851 11	SPA (13)	1	90	2	350	7400	50	15-36	15	19	58	79	100	20	M10	27	2,0
140 851 12	SPA (13)	2	90	2	350	7400	50	20-42	15	19	58	79	100	35	M10	27	2,3
140 852 01	SPA (13)	1	90	3	800	7400	65	34-64	15	19	78	108	130	20	M12	27	3,1
140 852 02	SPA (13)	2	90	3	800	7400	65	49-70	15	19	78	108	130	35	M12	27	3,5
140 852 03	SPA (13)	3	90	3	800	7400	65	49-70	15	19	78	108	130	50	M12	27	3,8
140 852 04	SPA (13)	1	125	3	800	5300	65	33-63	15	19	78	108	130	20	M12	27	3,9
140 852 05	SPA (13)	2	125	3	800	5300	65	49-70	15	19	78	108	130	35	M12	27	4,8
140 854 01	SPB (17)	1	125	3	800	5300	65	35-65	19	19	78	108	130	25	M12	27	4,2
140 854 02	SPB (17)	2	125	3	800	5300	65	48-69	19	19	78	108	130	44	M12	27	5,3
140 854 03	SPB (17)	3	125	4	1500	5300	87,5	104-107	19	17	95	140	175	63	M16	27	7,9
140 854 04	SPB (17)	3	140	4	1500	4000	87,5	104-107	19	17	95	140	175	63	M16	27	9,2

Tensioning Rollers

Material: Short roller made from high-grade industrial plastic.

Tensioning rollers are used for tensioning (or as an idler) on the outside of the belt (back of belt). The tensioning rollers can either be mounted rigidly or be combined with tensioning elements to make up an elastic belt tensioner.

It runs on two permanently lubricated 2-Z ball bearings.

Tensioning element has to be ordered separately.

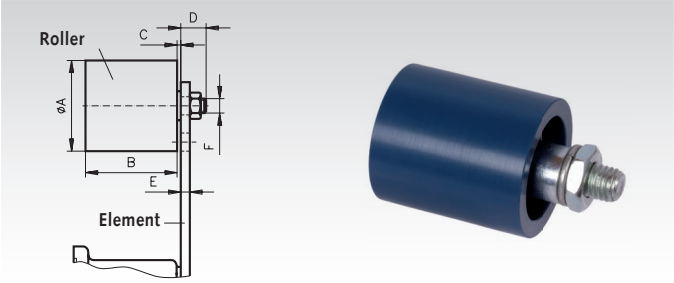

Ordering Details: e.g.: Product No. 140 872 00, Tensioning Roller Ø 30 mm

Product-No.	Diameter A mm	Product No. Tensioning Element matching	B mm	C mm	D mm	E max. mm	F mm	Weight kg
140 872 00	30	**140 800 00**	35	2	14	5	M8	0,08
140 874 00	40	**140 801 00**	45	6	16	7	M10	0,17
140 876 00	60	**140 803 00**	60	8	17	8	M12	0,40
140 878 00	80	**140 804 00**	90	8	25	10	M20	1,15

Tensioning Elements in Standard Version

Material: Housing up to Ø 78 mm made from sintered steel, over Ø 78 mm made from grey cast iron GG20, lever made from St52.
Can be used for tensioning all common kinds of chain and belt drives. The elastomeric inserts are based on highly-elastic natural rubber with a good shape memory and are designed for applications in temperatures from -40° to +80°C
The tensioning elements are painted blue and supplied with a zinc-plated screw and spring washer. Can be used for both tensioning directions. Temperature range: -40° to +80°C.

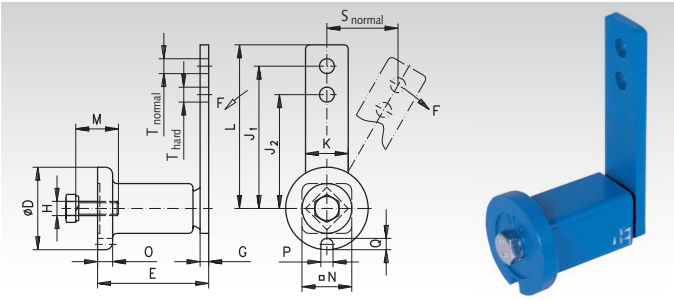

Ordering Details: e.g.: Product No. 140 800 00, Tensioning Element Ø 35 mm

Product No.	Size	F max. normal N	F max. hard N	s max. normal mm	s max. hard mm	D mm	E mm	G mm	H mm	J_1 mm	J_2 mm	K mm	L mm	M mm	N mm	O mm	P mm	Q mm	T mm	M_A Nm	Weight kg
140 800 00	0	80	106	40	30	35	51 $^{+1,0}_{-0,5}$	5	M6	80	60	20	90	20	22	6	8	5	8,5	10	0,2
140 801 00	1	135	168	50	40	45	64 $^{+1,0}_{-0,5}$	5	M8	100	80	25	112,5	25	30	8	8,5	6	10,5	25	0,4
140 802 00	2	350	437	50	40	58	79 $^{+1,5}_{-0,5}$	7	M10	100	80	30	115	30	35	10,5	8,5	8	10,5	49	0,6
140 803 00	3	800	1040	65	50	78	108 $^{+2}_{-0,5}$	8	M12	130	100	50	155	40	52	15	10,5	10	12,5	86	1,7
140 804 00	4	1500	1875	87,5	70	95	140 $^{+2}_{-0,5}$	10	M16	175	140	60	205	40	66	15	12,5	12	20,5	210	3,55

V-Belts DIN 7753

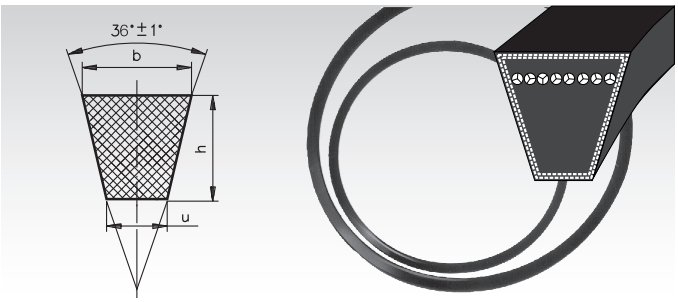

Dimensions in mm/wedge angle approx. 36°

Standard Size	SPZ	SPA
Width b	9.7	12.7
Height h	8	10
Width u	4.2	5.8
Smallest medium pulley diameter	63	90

Conversion table for Outside (L_A) and Reference Length (L_R).

Standard Size	SPZ	SPA
$L_A = L_R$ + mm	13	18

V-Belts DIN 2215

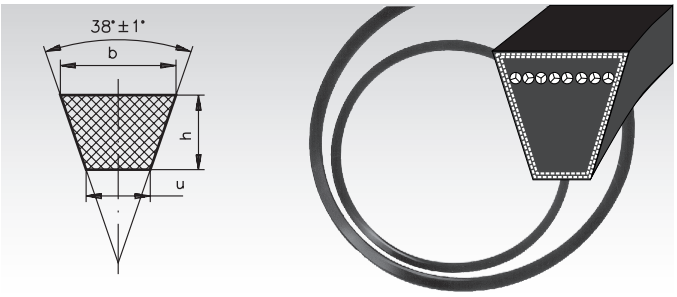

Dimensions in mm/wedge angle approx. 38°

ISO short symbol	Z	A	B
Width b	10	13	17
Height h	6	8	11
Width u	5.9	7.5	9.4
Smallest medium pulley diameter	50	75	125

Conversion table for reference and outside lengths.

Standard Profile	10	13	17
Inside Length = Reference Length - mm (approx.value)	22	30	40
Outside Length = Inside Length + mm (approx.value)	35	50	65

Ordering Details: e.g.: Product No. 150 816 00, V-Belt Profile SPZ, L_R 630 mm

Profile SPZ (9.7)		Profile SPA (12.7)	
Product No.	Reference Length (L_R) mm	**Product No.**	Reference Length (L_R) mm
150 816 00	630	**152 820 00**	732
150 818 00	670	**152 822 00**	757
150 820 00	710	**152 825 00**	800
150 822 00	750	**152 830 00**	850
150 824 00	762	**152 834 00**	900
150 825 00	800	**152 836 00**	950
150 827 00	812	**152 838 00**	1000
150 830 00	850	**152 840 00**	1060
150 832 00	875	**152 843 00**	1120
150 834 00	900	**152 844 00**	1157
150 836 00	950	**152 845 00**	1180
150 838 00	1000	**152 848 00**	1232
150 840 00	1060	**152 849 00**	1250
150 841 00	1087	**152 851 00**	1320
150 843 00	1120	**152 854 00**	1400
150 845 00	1180	**152 856 00**	1482
150 847 00	1212	**152 857 00**	1500
150 849 00	1250	**152 860 00**	1600
150 851 00	1320	**152 863 00**	1700
150 854 00	1400	**152 866 00**	1800
150 857 00	1500	**152 869 00**	1900
150 860 00	1600	**152 872 00**	2000
150 863 00	1700	**152 874 00**	2120
150 866 00	1800	**152 875 00**	2240
150 869 00	1900	**152 877 00**	2360
150 872 00	2000	**152 879 00**	2500
150 875 00	2240	**152 881 00**	2650
150 877 00	2360	**152 883 00**	2800
150 879 00	2500	**152 886 00**	3000
150 881 00	2650	**152 888 00**	3150
150 883 00	2800	**152 891 00**	3350
150 886 00	3000	**152 893 00**	3550
150 888 00	3150	**152 895 00**	3750
150 891 00	3350	**152 896 00**	4000
150 893 00	3550	**152 897 00**	4500

Profile Z (10)		Profile A (13)		Profile B (17)	
Product No.	Reference Length mm	**Product No.**	Reference Length mm	**Product No.**	Reference Length mm
150 602 00	397*	**152 610 00**	510	**154 606 00**	690
150 603 00	422*	**152 615 00**	590	**154 607 00**	710
150 604 00	447*	**152 618 00**	630	**154 608 00**	750
150 606 00	472*	**152 619 00**	660	**154 609 00**	790
150 608 00	497*	**152 620 00**	700	**154 610 00**	815
150 609 00	522*	**152 621 00**	740	**154 611 00**	840
150 611 00	552*	**152 622 00**	760	**154 613 00**	876
150 613 00	582*	**152 623 00**	780	**154 614 00**	890
150 615 00	597	**152 624 00**	805	**154 616 00**	940
150 616 00	622	**152 625 00**	830	**154 617 00**	965
150 618 00	652	**152 626 00**	855	**154 618 00**	990
150 619 00	692	**152 628 00**	880	**154 620 00**	1015
150 620 00	732	**152 629 00**	905	**154 621 00**	1040
150 621 00	747	**152 630 00**	930	**154 623 00**	1070
150 622 00	772	**152 631 00**	955	**154 625 00**	1100
150 623 00	797	**152 632 00**	980	**154 628 00**	1140
150 624 00	822	**152 633 00**	1005	**154 629 00**	1160
150 625 00	847	**152 635 00**	1030	**154 630 00**	1190
150 627 00	872	**152 636 00**	1060	**154 631 00**	1220
150 628 00	897	**152 637 00**	1071	**154 632 00**	1240
150 629 00	922	**152 638 00**	1090	**154 634 00**	1265
150 630 00	947	**152 640 00**	1130	**154 635 00**	1290
150 631 00	972	**152 641 00**	1150	**154 637 00**	1315
150 632 00	997	**152 643 00**	1180	**154 639 00**	1340
150 633 00	1022	**152 645 00**	1210	**154 640 00**	1360
150 635 00	1052	**152 646 00**	1230	**154 642 00**	1390
150 636 00	1082	**152 647 00**	1255	**154 644 00**	1412
150 638 00	1102	**152 648 00**	1280	**154 646 00**	1440
150 639 00	1142	**152 649 00**	1300	**154 647 00**	1462
150 641 00	1172	**152 651 00**	1330	**154 648 00**	1490
150 643 00	1202	**152 652 00**	1350	**154 649 00**	1513
150 645 00	1247	**152 654 00**	1405	**154 650 00**	1540
150 647 00	1272	**152 655 00**	1430	**154 651 00**	1565
150 648 00	1292	**152 657 00**	1480	**154 652 00**	1590
150 649 00	1317	**152 658 00**	1505	**154 653 00**	1615
150 651 00	1342	**152 659 00**	1530	**154 654 00**	1640
150 652 00	1393	**152 660 00**	1555	**154 655 00**	1665
150 654 00	1422	**152 663 00**	1605	**154 656 00**	1690
150 655 00	1472	**152 664 00**	1630	**154 657 00**	1716
150 657 00	1497	**152 665 00**	1655	**154 658 00**	1740
150 658 00	1522	**152 666 00**	1680	**154 663 00**	1840
150 659 00	1572	**152 667 00**	1706	**154 668 00**	1940
150 661 00	1622	**152 668 00**	1730	**154 673 00**	2040
150 665 00	1673	**152 669 00**	1755	**154 676 00**	2100
150 666 00	1697	**152 670 00**	1780	**154 679 00**	2160
150 667 00	1722	**152 671 00**	1805	**154 681 00**	2240
150 668 00	1772	**152 672 00**	1830	**154 682 00**	2280
150 670 00	1822	**152 674 00**	1884	**154 686 00**	2400
150 671 00	1872	**152 675 00**	1930	**154 689 00**	2490
150 672 00	1922	**152 676 00**	1960	**154 691 00**	2540
150 675 00	2022	**152 677 00**	2030	**154 692 00**	2580
150 677 00	2142	**152 679 00**	2150	**154 694 00**	2690
150 679 00	2262	**152 681 00**	2270	**154 695 00**	3040
150 681 00	2382	**152 683 00**	2390	**154 696 00**	3190
150 682 00	2522	**152 685 00**	2530	**154 697 00**	3590

* Toothed belt. Subject to change without notice.

Weight per Metre

Profile	kg/m
SPZ	0,074
SPA	0,123
Z (10)	0,064
A (13)	0,109
B (17)	0,180

Important

During mounting the belt must be pre-tensioned. After running in for 15 - 20 minutes the belt needs to be retightened.

At a continuous temperature of over 60° standard V-belts have only a short service life. Oil, Fats and chemicals should be kept away from the drive as they destroy the standard V-belts. Intermediate length are available on request.

CERTIFICATE

DEKRA

MAEDLER™
FOUNDED 1882

ISO 9001:2008

DEKRA Certification GmbH hereby certifies that the company

MAEDLER GmbH

Scope of certification:
Distributor of transmission components, standard parts, gear boxes and geared motors, pneumatic elements

Certified location:
D-70597 Stuttgart, Traenkestraße 6-8

has established and maintains a quality management system according to the above mentioned standard. The conformity was adduced with audit report no. A12081183.

This certificate is valid from 2012-12-20 to 2015-12-19

Certificate registration no.: 90395041/6
Duplicate

DAkkS Deutsche Akkreditierungsstelle D-ZM-16029-01-01

DEKRA Certification GmbH
Stuttgart, 2012-12-10

Lack of fulfilment on conditions as set out in the Certification Agreement may render this certificate invalid.

DEKRA Certification GmbH * Handwerkstraße 15 * D-70565 Stuttgart * www.dekra-certification.de
page 1 of 1

MÄDLER® meets even the highest quality requirements: Top quality, precision and reliability.

Certificates

on the internet at

www. maedler.de

in the sector Downloads