Overview Sprockets for Roller Chains DIN ISO 606 (ex DIN 8187)

Sprockets for Single-Strand Roller Chains (Simplex-Chains)

	Pitch	Type	Page
Comp. stand. 4 mm	4 mm	Steel with hub, pre-bored	79
DIN ISO 03	5 mm	Steel with hub, pre-bored	79
DIN ISO 04	6 mm	Plastic acetal, pre-bored	62
		Steel with and without hub, pre-bored	80
DIN ISO 05B-1	8 mm	Plastic acetal, pre-bored	62
		Stainless steel, pre-bored	63
		Steel with and without hub, pre-bored	81
DIN ISO 06B-1	3/8x7/32“	Plastic acetal, pre-bored	62
		Stainless steel, pre-bored	63
		Steel hardened, ready-to-mount, custom bore with keyway	64
		Taper version, ready for Taper clamping bush	74
		Steel with and without hub, pre-bored, partly hardened	82
		Double sprockets for two single-strand chains, pre-bored	91
DIN ISO 081	1/2x1/8“	Plastic acetal, pre-bored	62
		Steel with and without hub, pre-bored	83
DIN ISO 083 and comp. standard	1/2x3/16“	Plastic acetal, pre-bored	62
		Steel with and without hub, pre-bored	84
DIN ISO 08B-1	1/2x5/16“	Plastic acetal, pre-bored	62
		Stainless steel, pre-bored	63
		Steel hardened, ready-to-mount, custom bore with keyway	66
		Taper version, ready for Taper clamping bush	74
		Steel with and without hub, pre-bored, partly hardened	85
		Double sprockets for two single-strand chains, pre-bored	91
DIN ISO 10B-1	5/8x3/8“	Stainless steel, pre-bored	63
		Steel hardened, ready-to-mount, custom bore with keyway	68
		Taper version, ready for Taper clamping bush	74
		Steel with and without hub, pre-bored, partly hardened	86
		Double sprockets for two single-strand chains, pre-bored	91
DIN ISO 12B-1	3/4x7/16“	Stainless steel, pre-bored	63
		Steel hardened, ready-to-mount, custom bore with keyway	70
		Taper version, ready for Taper clamping bush	74
		Steel with and without hub, pre-bored	87
		Double sprockets for two single-strand chains, pre-bored	91
DIN ISO 16B-1	1“x17.02	Stainless steel, pre-bored	63
		Steel hardened, ready-to-mount, custom bore with keyway	72
		Taper version, ready for Taper clamping bush	75
		Steel with and without hub, pre-bored	88
		Double sprockets for two single-strand chains, pre-bored	91
DIN ISO 20B-1	1 1/4x3/4“	Steel with and without hub, pre-bored	89
DIN ISO 24B-1	1 1/2x1“	Steel with and without hub, pre-bored	90

Single-strand roller chains see page: 35-42, 46-55
Chain tensioners see page: 111
Chain-tensioning wheels see page: 109-115

Other sizes and sprockets with special design on request.

Overview Sprockets for Roller Chains DIN ISO 606 (ex DIN 8187)

Sprockets for Double-Strand Roller Chains (Duplex-Chains)

	Pitch	Type	Page
DIN ISO 05B-2	8mm	steel with and without hub, pre-bored	94
DIN ISO 06B-2	3/8x7/32“	taper version, complete for taper bush	92
		Steel with and without hub, pre-bored	95
DIN ISO 08B-2	1/2x5/16“	taper version, complete for taper bush	92
		Steel with and without hub, pre-bored	96
DIN ISO 10B-2	5/8x3/8“	taper version, complete for taper bush	92
		Steel with and without hub, pre-bored	97
DIN ISO 12B-2	3/4x7/16“	taper version, complete for taper bush	92
		Steel with and without hub, pre-bored	98
DIN ISO 16B-2	1“x17,02 mm	taper version, complete for taper bush	93
		Steel with and without hub, pre-bored	99
DIN ISO 20B-2	1 1/4x3/4“	Steel with and without hub, pre-bored	100
DIN ISO 24B-2	1 1/2x1“	Steel with and without hub, pre-bored	100

Double-strand roller chains see page: 43
Double-strand chain tensioners see page: 111
Double-strand chain-tensioning-wheels see page: 115

Other sizes and sprockets with special design on request.

Sprockets for Triple-Strand Roller Chains (Triplex-Chains)

	Pitch	Type	Page
DIN ISO 06B-3	3/8x7/32“	taper version, complete for taper bush	101
		steel with and without hub, pre-bored	102
DIN ISO 08B-3	1/2x5/16“	taper version, complete for taper bush	101
		Steel with and without hub, pre-bored	103
DIN ISO 10B-3	5/8x3/8“	taper version, complete for taper bush	101
		Steel with and without hub, pre-bored	104
DIN ISO 12B-3	3/4x7/16“	taper version, complete for taper bush	101
		Steel with and without hub, pre-bored	105
DIN ISO 16B-3	1“x17,02 mm	taper version, complete for taper bush	101
		Steel with and without hub, pre-bored	106

Triple-strand roller chains see page: 45
Triple-strand chain tensioners see page: 112
Triple-strand chain-tensioning-wheel page: 115

Other sizes and sprockets with special design on request.

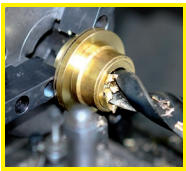

Reworking within 24h-service possible. Custom made parts on request.

Sprockets KRK Made from Acetal Resin with One-Sided Hub, Die Cast

Bores ISO H8.
Material specifications see page 821.

Metal inlays at the hub with custom bore, feather keyways or threads for set screw available on request, depending on the amount and size ordered.

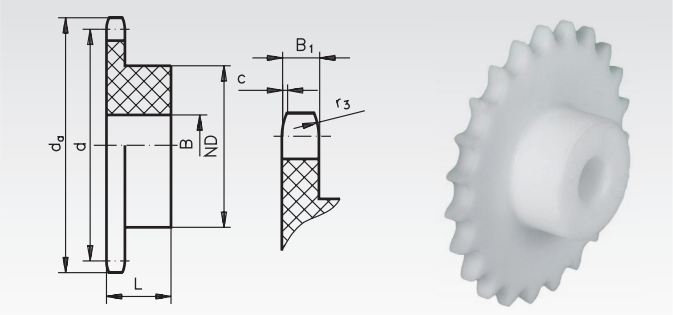

Ordering Details: e.g.: Product No. 100 513 00, KRK, Pitch 6 mm, Acetal Resin

Pitch 6 mm, ISO 04, B_1 = 2.6 mm, c = 0.6 mm, r_3 = 6 mm

Product No.	Number of teeth	d_a mm	d mm	B mm	ND mm	L mm	Weight g
100 513 00	13	27,5	25,05	8	18	10	3
100 515 00	15	31,0	28,86	8	21	10	5
100 517 00	17	35,0	32,65	8	24	13	8
100 519 00	19	39,0	36,44	8	24	13	9
100 521 00	21	42,5	40,25	10	28	13	11
100 523 00	23	46,5	44,06	10	28	13	12
100 525 00	25	50,0	47,87	10	28	13	13

Pitch 1/2 x 1/8", ISO 081, B_1 = 3 mm, c = 1.3 mm, r_3 = 13 mm

Product No.	Number of teeth	d_a mm	d mm	B mm	ND mm	L mm	Weight g
102 513 00	13	58,0	53,06	8	24	16	15
102 515 00	15	66,0	61,09	8	24	16	18
102 517 00	17	74,0	69,11	10	28	18	25
102 519 00	19	82,0	77,16	10	28	18	29
102 521 00	21	90,5	85,22	12	32	20	39
102 523 00	23	98,5	93,27	12	32	20	46
102 525 00	25	107,0	101,33	12	32	20	51

Pitch 8 mm, ISO 05 B-1, B_1 = 2.8 mm, c = 0.8 mm, r_3 = 8 mm

Product No.	Number of teeth	d_a mm	d mm	B mm	ND mm	L mm	Weight g
100 563 00	13	36,5	33,42	8	24	13	8
100 565 00	15	41,5	38,48	8	24	13	9
100 567 00	17	46,5	43,53	10	28	14	13
100 569 00	19	52,0	48,61	10	28	14	14
100 571 00	21	57,0	53,68	10	28	14	15
100 573 00	23	62,5	58,75	10	28	14	17
100 575 00	25	67,0	63,83	10	28	14	19

Pitch 1/2 x 3/16", ISO 083, B_1 = 4 mm, c = 1.3 mm, r_3 = 13 mm

Product No.	Number of teeth	d_a mm	d mm	B mm	ND mm	L mm	Weight g
103 513 00	13	58,0	53,06	8	24	17,4	18
103 515 00	15	66,0	61,09	8	24	17,4	23
103 517 00	17	74,0	69,11	10	28	19,4	31
103 519 00	19	82,0	77,16	10	28	19,4	37
103 521 00	21	90,5	85,22	12	32	21,4	48
103 523 00	23	98,5	93,27	12	32	21,4	56
103 525 00	25	107,0	101,33	12	32	21,4	66

Pitch 3/8 x 7/32", ISO 06 B-1, B_1 = 5.3 mm, c = 1.0 mm, r_3 = 10 mm

Product No.	Number of teeth	d_a mm	d mm	B mm	ND mm	L mm	Weight g
101 513 00	13	43,0	39,79	8	24	16	13
101 515 00	15	49,0	45,81	8	24	16	16
101 517 00	17	55,5	51,83	10	28	16	20
101 519 00	19	61,5	57,87	10	28	16	24
101 521 00	21	68,0	63,91	12	32	20	33
101 523 00	23	74,0	69,95	12	32	20	38
101 525 00	25	80,0	76,00	12	32	20	44

Pitch 1/2 x 5/16", ISO 08 B-1, B_1 = 7.2 mm, c = 1.3 mm, r_3 = 13 mm

Product No.	Number of teeth	d_a mm	d mm	B mm	ND mm	L mm	Weight g
105 513 00	13	58,0	53,06	10	28	20	26
105 515 00	15	66,0	61,09	10	28	20	33
105 517 00	17	74,0	69,11	12	32	25	48
105 519 00	19	82,0	77,16	12	32	25	56
105 521 00	21	90,5	85,22	16	36	25	68
105 523 00	23	98,5	93,27	16	36	25	79
105 525 00	25	107,0	101,33	16	36	25	90

Note regarding pulleys made from acetal resin

Inside these injection-moulded parts are some cavities caused by production. These parts should therefore not be drilled too deep. With larger bores or when grooving the cavities might become visible. This often does not affect the functionality.

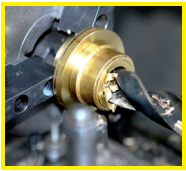

Reworking within 24h-service possible. Custom made parts on request.

Sprockets KRR Made from Stainless Steel with One-Sided Hub

Material: Stainless steel 1.4305.
Teeth milled, pre-bored.

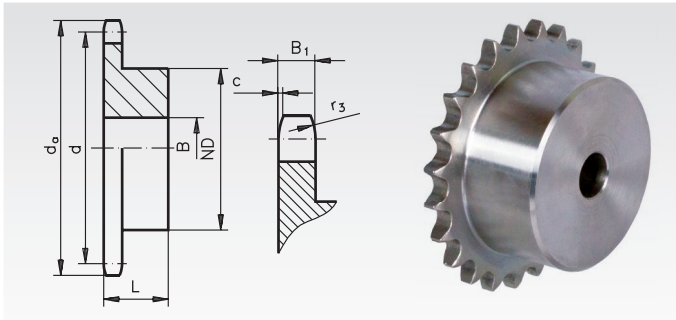

Ordering Details: e.g.: Product No. 100 998 13, Sprocket, Pitch 8 mm, 13 Teeth, Stainless

Pitch 8 mm, ISO 05 B-1, B_1 = 2.8 mm, c = 0.8 mm, r_3 = 8 mm

Product No.	Number of teeth	d_a mm	d mm	ND mm	B mm	L mm	Weight g
100 998 13	13	36,7	33,42	23	8	13	44
100 998 15	15	41,7	38,48	28	8	13	65
100 998 17	17	46,8	43,53	30	8	14	85
100 998 19	19	51,9	48,61	30	8	14	93
100 998 21	21	57,0	53,68	35	8	14	124
100 998 23	23	62,0	58,75	35	8	14	131
100 998 25	25	67,5	63,83	35	8	14	142

Pitch 5/8 x 3/8", ISO 10 B-1, B_1 = 9.1 mm, c = 1.6 mm, r_3 = 16 mm

Product No.	Number of teeth	d_a mm	d mm	ND mm	B mm	L mm	Weight g
106 991 13	13	73,0	66,32	47	12	30	482
106 991 14	14	78,0	71,34	52	12	30	570
106 991 15	15	83,0	76,36	57	12	30	695
106 991 16	16	88,0	81,37	60	14	30	757
106 991 17	17	93,0	86,39	60	14	30	812
106 991 18	18	98,3	91,42	70	14	30	1039
106 991 19	19	103,3	96,45	70	14	30	1175
106 991 20	20	108,4	101,49	75	14	30	1228
106 991 21	21	113,4	106,52	75	16	30	1382
106 991 23	23	123,4	116,58	80	16	30	1500
106 991 25	25	134,0	126,66	80	16	30	1620
106 991 30	30	158,8	151,87	90	20	35	2464

Pitch 3/8 x 7/32", ISO 06 B-1, B_1 = 5.3 mm, c = 1.0 mm, r_3 = 10 mm

Product No.	Number of teeth	d_a mm	d mm	ND mm	B mm	L mm	Weight g
101 991 13	13	43,0	39,79	28	10	25	123
101 991 15	15	49,3	45,81	34	10	25	188
101 991 16	16	52,3	48,82	37	10	28	241
101 991 17	17	55,3	51,83	40	10	28	287
101 991 18	18	58,3	54,85	43	10	28	331
101 991 19	19	61,3	57,87	45	10	28	370
101 991 20	20	64,3	60,89	46	10	28	380
101 991 21	21	68,0	63,91	48	12	28	391
101 991 23	23	73,5	69,95	52	12	28	502
101 991 25	25	80,0	76,00	57	12	28	592
101 991 30	30	94,7	91,12	60	12	28	787

Pitch 3/4 x 7/16", ISO 12 B-1, B_1 = 11.1 mm, c = 2 mm, r_3 = 19 mm

Product No.	Number of teeth	d_a mm	d mm	ND mm	B mm	L mm	Weight g
107 991 13	13	87,5	79,59	58	16	35	830
107 991 15	15	99,8	91,63	70	16	35	1190
107 991 16	16	105,5	97,65	75	16	35	1376
107 991 17	17	111,5	103,67	80	16	35	1569
107 991 18	18	118,0	109,71	80	16	35	1653
107 991 19	19	124,2	115,75	80	16	35	1752
107 991 20	20	129,7	121,78	80	16	35	1837
107 991 21	21	136,0	127,82	90	20	40	2398
107 991 23	23	149,0	139,90	90	20	40	2613
107 991 25	25	160,0	152,00	90	20	40	2853

Pitch 1/2 x 5/16", ISO 08 B-1, B_1 = 7.2 mm, c = 1.3 mm, r_3 = 13 mm

Product No.	Number of teeth	d_a mm	d mm	ND mm	B mm	L mm	Weight g
105 991 12	12	53,0	49,07	33	10	28	215
105 991 13	13	57,9	53,60	37	10	28	270
105 991 15	15	65,9	61,09	45	10	28	395
105 991 16	16	69,9	65,10	50	12	28	465
105 991 17	17	74,0	69,11	52	12	28	510
105 991 18	18	78,0	73,14	56	12	28	593
105 991 19	19	82,0	77,16	60	12	28	670
105 991 20	20	86,0	81,19	64	12	28	775
105 991 21	21	90,1	85,22	68	14	28	861
105 991 23	23	98,1	93,27	70	14	28	958
105 991 25	25	106,2	101,33	70	14	28	1034
105 991 30	30	126,3	121,50	80	16	30	1480

Pitch 1" x 17.02, ISO 16 B-1, B_1 = 16.2 mm, c = 2.5 mm, r_3 = 26 mm

Product No.	Number of teeth	d_a mm	d mm	ND mm	B mm	L mm	Weight g
108 991 13	13	117,0	106,12	78	16	40	1830
108 991 15	15	133,0	122,17	92	16	40	2527
108 991 16	16	141,0	130,20	100	20	45	3218
108 991 17	17	149,0	138,22	100	20	45	3417
108 991 18	18	157,0	146,28	100	20	45	3642
108 991 19	19	165,2	154,33	100	20	45	3882
108 991 20	20	173,0	162,38	100	20	45	4102
108 991 21	21	181,2	170,43	110	20	50	5121

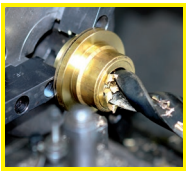

Reworking within 24h-service possible. Custom made parts on request.

Sprockets KRF, Teeth Hardened, Pitch 3/8 x 7/32“, ISO 06 B-1

Material: Steel C45.

Ready-to-install, for various shaft diameters.

Teeth milled and induction hardened (HRC 50), custom bore H7 - surface parameter R_a 1.6, keyway in accordance with DIN 6885/1 positioned beneath tip of tooth, 2 threads for set screws, one positioned for the keyway, one offset by 90°.

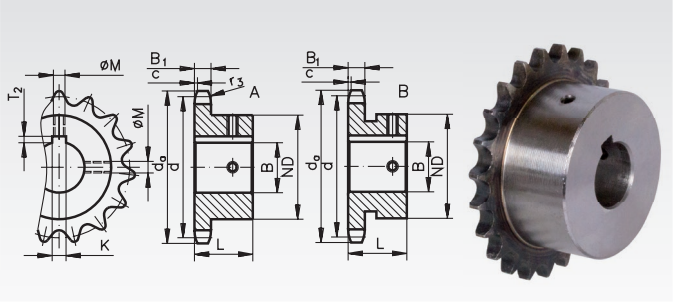

Ordering Details: e.g.: Product No. 101 810 12, Sprocket KRF, Pitch 3/8 x 7/32“ , 10 Teeth, 12 mm Bore

Pitch 3/8 x 7/32“, B_1 = 5.3 mm, c = 1.0 mm, r_3 = 10 mm

Product No.	Number of teeth	Bore mm	Type	d_a mm	d mm	ND mm	L mm	K mm	T_2 mm	M	Weight kg
101 810 12	10	12	B	34,5	30,82	26	20	4	1,8	M4	0,066
101 810 14	10	14	B	34,5	30,82	29	20	5	2,3	M4	0,068
101 811 14	11	14	B	37,5	33,80	29	25	5	2,3	M4	0,144
101 811 15	11	15	B	37,5	33,80	30	25	5	2,3	M4	0,088
101 812 12	12	12	B	40,5	36,80	26	25	4	1,8	M4	0,102
101 812 14	12	14	B	40,5	36,80	29	25	5	2,3	M4	0,108
101 812 15	12	15	B	40,5	36,80	30	25	5	2,3	M4	0,110
101 813 14	13	14	A	43,5	39,80	28	25	5	2,3	M4	0,116
101 813 15	13	15	A	43,5	39,80	28	25	5	2,3	M4	0,110
101 814 14	14	14	A	46,5	42,80	31	25	5	2,3	M4	0,144
101 814 15	14	15	A	46,5	42,80	31	25	5	2,3	M4	0,140
101 814 16	14	16	A	46,5	42,80	31	25	5	2,3	M4	0,134
101 814 19	14	19	B	46,5	42,80	35	25	6	2,8	M5	0,142
101 815 14	15	14	A	49,5	45,81	34	25	5	2,3	M4	0,174
101 815 15	15	15	A	49,5	45,81	34	25	5	2,3	M4	0,170
101 815 20	15	20	A	49,5	45,81	34	25	6	2,8	M5	0,142
101 815 24	15	24	B	49,5	45,81	42	25	8	3,3	M6	0,168
101 815 25	15	25	B	49,5	45,81	42	25	8	3,3	M6	0,160
101 816 15	16	15	A	52,5	48,82	37	28	5	2,3	M4	0,228
101 816 18	16	18	A	52,5	48,82	37	28	6	2,8	M5	0,212
101 816 20	16	20	A	52,5	48,82	37	28	6	2,8	M5	0,188
101 816 25	16	25	B	52,5	48,82	42	28	8	3,3	M6	0,202
101 817 14	17	14	A	55,5	51,83	40	28	5	2,3	M4	0,274
101 817 16	17	16	A	55,5	51,83	40	28	5	2,3	M4	0,266
101 817 20	17	20	A	55,5	51,83	40	28	6	2,8	M5	0,238
101 817 24	17	24	B	55,5	51,83	46	28	8	3,3	M6	0,262
101 817 25	17	25	B	55,5	51,83	46	28	8	3,3	M6	0,256
101 818 14	18	14	A	58,6	54,85	40	28	5	2,3	M4	0,286
101 818 16	18	16	A	58,6	54,85	43	28	5	2,3	M4	0,310
101 818 20	18	20	A	58,6	54,85	43	28	6	2,8	M5	0,282

Tolerances

Bore
from 12 mm to 18 mm: +0.018 / -0
from 19 mm to 30 mm: +0.021 / -0
from 32 mm to 50 mm: +0.025 / -0

Keyway width
from 4 mm to 6 mm: +0.030 / -0
from 8 mm to 10 mm: +0.036 / -0
from 12 mm to 14 mm: +0.043 / -0

Keyway depth
from 1.8 mm to 2.8 mm: +0.10 / -0
from 3.3 mm to 3.8 mm: +0.20 / -0

Sprockets KRF, Teeth Hardened, Pitch 3/8 x 7/32“, ISO 06 B-1

Material: Steel C45.

Ready-to-install, for various shaft diameters.

Teeth milled and induction hardened (HRC 50), custom bore H7 - surface parameter R_a 1.6, keyway in accordance with DIN 6885/1 positioned beneath tip of tooth, 2 threads for set screws, one positioned for the keyway, one offset by 90°.

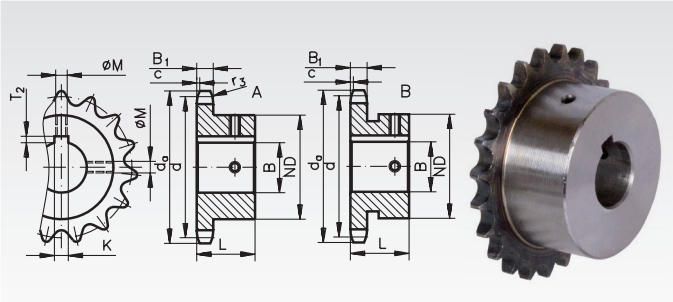

Ordering Details: e.g.: Product No. 101 818 24, Sprocket KRF, Pitch 3/8 x 7/32“ , 18 Teeth, 24 mm Bore

Pitch 3/8 x 7/32“, B_1 = 5.3 mm, c = 1.0 mm, r_3 = 10 mm

Product No.	Number of teeth	Bore mm	Type	d_a mm	d mm	ND mm	L mm	K mm	T_2 mm	M	Weight kg
101 818 24	18	24	A	58,6	54,85	43	28	8	3,3	M6	0,252
101 818 25	18	25	A	58,6	54,85	43	28	8	3,3	M6	0,242
101 819 12	19	12	A	61,6	57,87	40	28	4	1,8	M4	0,304
101 819 14	19	14	A	61,6	57,87	40	28	5	2,3	M4	0,286
101 819 15	19	15	A	61,6	57,87	45	28	5	2,3	M4	0,350
101 819 20	19	20	A	61,6	57,87	45	28	6	2,8	M5	0,318
101 819 25	19	25	A	61,6	57,87	45	28	8	3,3	M6	0,276
101 820 14	20	14	A	64,6	60,89	40	28	5	2,3	M4	0,306
101 820 20	20	20	A	64,6	60,89	46	28	6	2,8	M5	0,340
101 820 24	20	24	A	64,6	60,89	46	28	8	3,3	M6	0,308
101 820 25	20	25	A	64,6	60,89	46	28	8	3,3	M6	0,300
101 821 15	21	15	A	67,6	63,91	48	28	5	2,3	M4	0,408
101 821 20	21	20	A	67,6	63,91	48	28	6	2,8	M5	0,380
101 821 24	21	24	A	67,6	63,91	48	28	8	3,3	M6	0,348
101 821 25	21	25	A	67,6	63,91	48	28	8	3,3	M6	0,340
101 822 20	22	20	A	70,6	66,93	50	28	6	2,8	M5	0,424
101 822 24	22	24	A	70,6	66,93	50	28	8	3,3	M6	0,384
101 822 25	22	25	A	70,6	66,93	50	28	8	3,3	M6	0,382
101 823 20	23	20	A	73,7	69,95	52	28	6	2,8	M5	0,464
101 823 25	23	25	A	73,7	69,95	52	28	8	3,3	M6	0,420
101 824 20	24	20	A	76,7	72,97	54	28	6	2,8	M5	0,508
101 824 25	24	25	A	76,7	72,97	54	28	8	3,3	M6	0,466
101 824 30	24	30	A	76,7	72,97	54	28	8	3,3	M6	0,422
101 825 20	25	20	A	79,7	76,00	57	28	6	2,8	M5	0,568
101 825 22	25	22	A	79,7	76,00	57	28	6	2,8	M5	0,550
101 825 25	25	25	A	79,7	76,00	57	28	8	3,3	M6	0,524
101 825 30	25	30	A	79,7	76,00	57	28	8	3,3	M6	0,478
101 830 20	30	20	A	94,8	91,12	60	30	6	2,8	M5	0,746
101 830 25	30	25	A	94,8	91,12	60	30	8	3,3	M6	0,704
101 830 30	30	30	A	94,8	91,12	60	30	8	3,3	M6	0,656

Tolerances

Bore
from 12 mm to 18 mm: +0.018 / -0
from 19 mm to 30 mm: +0.021 / -0
from 32 mm to 50 mm: +0.025 / -0

Keyway Width
from 4 mm to 6 mm: +0.030 / -0
from 8 mm to 10 mm: +0.036 / -0
from 12 mm to 14 mm: +0.043 / -0

Keyway depth
from 1.8 mm to 2.8 mm: +0.10 / -0
from 3.3 mm to 3.8 mm: +0.20 / -0

Sprockets KRF, Teeth Hardened, Pitch 1/2 x 5/16", ISO 08 B-1

Material: Steel C45.

Ready-to-install, for various shaft diameters.

Teeth milled and induction hardened (HRC 50), custom bore H7 - surface parameter R_a 1.6, keyway in accordance with DIN 6885/1 positioned beneath tip of tooth, 2 threads for set screws, one positioned for the keyway, one offset by 90°.

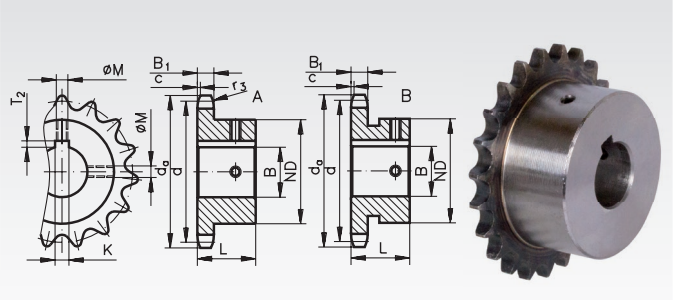

Ordering Details: e.g.: Product No. 105 810 15, Sprocket KRF, Pitch 1/2 x 5/16" , 10 Teeth, 15 mm Bore

Pitch 1/2 x 5/16", B_1 = 7.2 mm, c = 1.3 mm, r_3 = 13 mm

Product No.	Number of teeth	Bore mm	Type	d_a mm	d mm	ND mm	L mm	K mm	T_2 mm	M	Weight kg
105 810 15	10	15	B	45,90	41,10	31	25	5	2,3	M4	0,126
105 810 16	10	16	B	45,90	41,10	31	25	5	2,3	M4	0,118
105 811 14	11	14	A	49,90	45,07	29	25	5	2,3	M4	0,142
105 811 15	11	15	B	49,90	45,07	31	25	5	2,3	M4	0,146
105 811 16	11	16	B	49,90	45,07	31	25	5	2,3	M4	0,140
105 811 18	11	18	B	49,90	45,07	37	25	6	2,8	M5	0,158
105 812 15	12	15	A	53,90	49,07	33	28	5	2,3	M4	0,200
105 812 16	12	16	A	53,90	49,07	33	28	5	2,3	M4	0,184
105 812 18	12	18	A	53,90	49,07	33	28	6	2,8	M5	0,174
105 812 20	12	20	A	53,90	49,07	33	28	6	2,8	M5	0,166
105 812 25	12	25	B	53,90	49,07	42	28	8	3,3	M6	0,180
105 813 16	13	16	A	57,90	53,06	37	28	5	2,3	M4	0,246
105 813 20	13	20	A	57,90	53,06	37	28	6	2,8	M5	0,220
105 813 25	13	25	B	57,90	53,06	42	28	8	3,3	M6	0,216
105 813 28	13	28	B	57,90	53,06	45	28	8	3,3	M6	0,212
105 814 16	14	16	A	61,90	57,07	41	28	5	2,3	M4	0,304
105 814 19	14	19	A	61,90	57,07	41	28	6	2,8	M5	0,284
105 814 20	14	20	A	61,90	57,07	41	28	6	2,8	M5	0,276
105 814 25	14	25	A	61,90	57,07	41	28	8	3,3	M6	0,236
105 814 28	14	28	B	61,90	57,07	48	28	8	3,3	M6	0,266
105 815 16	15	16	A	65,90	61,09	45	28	5	2,3	M4	0,366
105 815 19	15	19	A	65,90	61,09	45	28	6	2,8	M5	0,348
105 815 20	15	20	A	65,90	61,09	45	28	6	2,8	M5	0,340
105 815 24	15	24	A	65,90	61,09	45	28	8	3,3	M6	0,308
105 815 25	15	25	A	65,90	61,09	45	28	8	3,3	M6	0,300
105 815 28	15	28	A	65,90	61,09	45	28	8	3,3	M6	0,272
105 815 30	15	30	B	65,90	61,09	52	28	8	3,3	M6	0,316
105 816 18	16	18	A	69,90	65,10	50	28	6	2,8	M5	0,438
105 816 20	16	20	A	69,90	65,10	50	28	6	2,8	M5	0,426
105 816 24	16	24	A	69,90	65,10	50	28	8	3,3	M6	0,382
105 816 25	16	25	A	69,90	65,10	50	28	8	3,3	M6	0,382
105 816 30	16	30	A	69,90	65,10	50	28	8	3,3	M6	0,336
105 817 18	17	18	A	74,00	69,11	52	28	6	2,8	M5	0,486
105 817 19	17	19	A	74,00	69,11	52	28	6	2,8	M5	0,482
105 817 20	17	20	A	74,00	69,11	52	28	6	2,8	M5	0,472
105 817 24	17	24	A	74,00	69,11	52	28	8	3,3	M6	0,438
105 817 25	17	25	A	74,00	69,11	52	28	8	3,3	M6	0,428
105 817 28	17	28	A	74,00	69,11	52	28	8	3,3	M6	0,402
105 817 30	17	30	A	74,00	69,11	52	28	8	3,3	M6	0,388
105 818 18	18	18	A	78,00	73,14	52	28	6	2,8	M5	0,510
105 818 20	18	20	A	78,00	73,14	56	28	6	2,8	M5	0,550
105 818 24	18	24	A	78,00	73,14	56	28	8	3,3	M6	0,516

Tolerances

Bore
from 12 mm to 18 mm: +0.018 / -0
from 19 mm to 30 mm: +0.021 / -0
from 32 mm to 50 mm: +0.025 / -0

Keyway width
from 4 mm to 6 mm: +0.030 / -0
from 8 mm to 10 mm: +0.036 / -0
from 12 mm to 14 mm: +0.043 / -0

Keyway depth
from 1.8 mm to 2.8 mm: +0.10 / -0
from 3.3 mm to 3.8 mm: +0.20 / -0

Sprockets KRF, Teeth Hardened, Pitch 1/2 x 5/16", ISO 08 B-1

Material: Steel C45.

Ready-to-install, for various shaft diameters.

Teeth milled and induction hardened (HRC 50), custom bore H7 - surface parameter R_a 1.6, keyway in accordance with DIN 6885/1 positioned beneath tip of tooth, 2 threads for set screws, one positioned for the keyway, one offset by 90°.

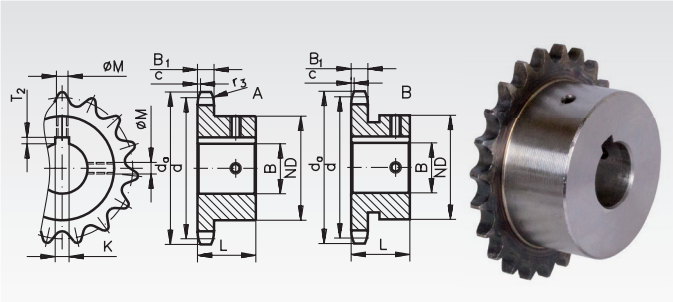

Ordering Details: e.g.: Product No. 105 818 25, Sprocket KRF, Pitch 1/2 x 5/16" , 18 Teeth, 25 mm Bore

Pitch 1/2 x 5/16", B_1 = 7.2 mm, c = 1.3 mm, r_3 = 13 mm

Product No.	Number of teeth	Bore mm	Type	d_a mm	d mm	ND mm	L mm	K mm	T_2 mm	M	Weight kg
105 818 25	18	25	A	78,00	73,14	56	28	8	3,3	M6	0,510
105 818 30	18	30	A	78,00	73,14	56	28	8	3,3	M6	0,464
105 818 35	18	35	A	78,00	73,14	56	28	10	3,3	M8	0,406
105 819 20	19	20	A	82,00	77,16	60	28	6	2,8	M5	0,636
105 819 25	19	25	A	82,00	77,16	60	28	8	3,3	M6	0,584
105 819 30	19	30	A	82,00	77,16	60	28	8	3,3	M6	0,548
105 819 35	19	35	A	82,00	77,16	60	28	10	3,3	M8	0,488
105 820 18	20	18	A	86,00	81,19	55	28	6	2,8	M5	0,614
105 820 20	20	20	A	86,00	81,19	64	28	6	2,8	M5	0,740
105 820 24	20	24	A	86,00	81,19	64	28	8	3,3	M6	0,710
105 820 25	20	25	A	86,00	81,19	64	28	8	3,3	M6	0,700
105 820 28	20	28	A	86,00	81,19	64	28	8	3,3	M6	0,672
105 820 30	20	30	A	86,00	81,19	64	28	8	3,3	M6	0,652
105 820 35	20	35	A	86,00	81,19	64	28	10	3,3	M8	0,610
105 821 20	21	20	A	90,10	85,22	60	28	6	2,8	M5	0,702
105 821 25	21	25	A	90,10	85,22	68	28	8	3,3	M6	0,782
105 821 30	21	30	A	90,10	85,22	68	28	8	3,3	M6	0,750
105 821 35	21	35	A	90,10	85,22	68	28	10	3,3	M8	0,686
105 822 20	22	20	A	94,10	89,24	65	28	6	2,8	M5	0,816
105 822 25	22	25	A	94,10	89,24	70	28	8	3,3	M6	0,858
105 822 30	22	30	A	94,10	89,24	70	28	8	3,3	M6	0,808
105 822 35	22	35	A	94,10	89,24	70	28	10	3,3	M8	0,754
105 823 20	23	20	A	98,10	93,27	65	28	6	2,8	M5	0,848
105 823 25	23	25	A	98,10	93,27	70	28	8	3,3	M6	0,884
105 823 30	23	30	A	98,10	93,27	70	28	8	3,3	M6	0,844
105 823 35	23	35	A	98,10	93,27	70	28	10	3,3	M8	0,780
105 824 20	24	20	A	102,10	97,29	65	28	6	2,8	M5	0,880
105 824 25	24	25	A	102,10	97,29	70	28	8	3,3	M6	0,830
105 824 28	24	28	A	102,10	97,29	70	28	8	3,3	M6	0,804
105 824 30	24	30	A	102,10	97,29	70	28	8	3,3	M6	0,882
105 824 35	24	35	A	102,10	97,29	70	28	10	3,3	M8	0,824
105 825 20	25	20	A	106,20	101,33	65	28	6	2,8	M5	0,820
105 825 24	25	24	A	106,20	101,33	70	28	8	3,3	M6	0,872
105 825 25	25	25	A	106,20	101,33	70	28	8	3,3	M6	0,868
105 825 28	25	28	A	106,20	101,33	70	28	8	3,3	M6	0,842
105 825 30	25	30	A	106,20	101,33	70	28	8	3,3	M6	0,824
105 825 35	25	35	A	106,20	101,33	70	28	10	3,3	M8	0,864
105 830 25	30	25	A	126,30	121,50	75	30	8	3,3	M6	1,314
105 830 28	30	28	A	126,30	121,50	75	30	8	3,3	M6	1,284
105 830 30	30	30	A	126,30	121,50	80	30	8	3,3	M6	1,366
105 830 35	30	35	A	126,30	121,50	80	30	10	3,3	M8	1,314

Tolerances

Bore
from 12 mm to 18 mm: +0.018 / -0
from 19 mm to 30 mm: +0.021 / -0
from 32 mm to 50 mm: +0.025 / -0

Keyway width
from 4 mm to 6 mm: +0.030 / -0
from 8 mm to 10 mm: +0.036 / -0
from 12 mm to 14 mm: +0.043 / -0

Keyway depth
from 1.8 mm to 2.8 mm: +0.10 / -0
from 3.3 mm to 3.8 mm: +0.20 / -0

Sprockets KRF, Teeth Hardened, Pitch 5/8 x 3/8", ISO 10 B-1

Material: Steel C45.

Ready-to-install, for various shaft diameters.

Teeth milled and induction hardened (HRC 50), custom bore H7 - surface parameter R_a 1.6, keyway in accordance with DIN 6885/1 positioned beneath tip of tooth, 2 threads for set screws, one positioned for the keyway, one offset by 90°.

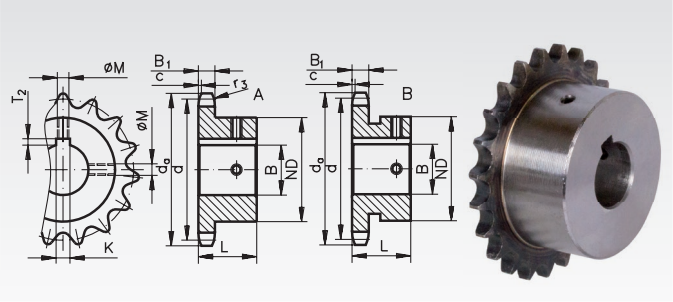

Ordering Details: e.g.: Product No. 106 810 18, Sprocket KRF, Pitch 5/8 x 3/8" , 10 Teeth, 18 mm Bore

Pitch 5/8 x 3/8", B_1 = 9.1 mm, c = 1.6 mm, r_3 = 16 mm

Product No.	Number of teeth	Bore mm	Type	d_a mm	d mm	ND mm	L mm	K mm	T_2 mm	M	Weight kg
106 810 18	10	18	A	58,3	51,37	35	25	6	2,8	M5	0,202
106 810 19	10	19	A	58,3	51,37	35	25	6	2,8	M5	0,186
106 810 20	10	20	A	58,3	51,37	35	25	6	2,8	M5	0,184
106 811 20	11	20	A	63,2	56,34	37	30	6	2,8	M5	0,260
106 811 25	11	25	B	63,2	56,34	47	30	8	3,3	M6	0,280
106 812 20	12	20	A	68,2	61,34	42	30	6	2,8	M5	0,344
106 812 25	12	25	A	68,2	61,34	42	30	8	3,3	M6	0,300
106 812 30	12	30	B	68,2	61,34	51	30	8	3,3	M6	0,322
106 813 18	13	18	A	73,2	66,32	47	30	6	2,8	M5	0,450
106 813 20	13	20	A	73,2	66,32	47	30	6	2,8	M5	0,436
106 813 25	13	25	A	73,2	66,32	47	30	8	3,3	M6	0,380
106 813 30	13	30	A	73,2	66,32	47	30	8	3,3	M6	0,340
106 814 20	14	20	A	78,2	71,34	52	30	6	2,8	M5	0,534
106 814 25	14	25	A	78,2	71,34	52	30	8	3,3	M6	0,480
106 814 30	14	30	A	78,2	71,34	52	30	8	3,3	M6	0,436
106 815 20	15	20	A	83,2	76,36	57	30	6	2,8	M5	0,646
106 815 24	15	24	A	83,2	76,36	57	30	8	3,3	M6	0,606
106 815 25	15	25	A	83,2	76,36	57	30	8	3,3	M6	0,588
106 815 30	15	30	A	83,2	76,36	57	30	8	3,3	M6	0,550
106 815 35	15	35	A	83,2	76,36	57	30	10	3,3	M8	0,486
106 816 20	16	20	A	88,3	81,37	60	30	6	2,8	M5	0,742
106 816 24	16	24	A	88,3	81,37	60	30	8	3,3	M6	0,708
106 816 25	16	25	A	88,3	81,37	60	30	8	3,3	M6	0,688
106 816 30	16	30	A	88,3	81,37	60	30	8	3,3	M6	0,646
106 816 35	16	35	A	88,3	81,37	60	30	10	3,3	M8	0,578
106 817 20	17	20	A	93,3	86,39	60	30	6	2,8	M5	0,784
106 817 25	17	25	A	93,3	86,39	60	30	8	3,3	M6	0,738
106 817 30	17	30	A	93,3	86,39	60	30	8	3,3	M6	0,684
106 817 35	17	35	A	93,3	86,39	60	30	10	3,3	M8	0,630
106 818 20	18	20	A	98,3	91,42	60	30	6	2,8	M5	0,834
106 818 25	18	25	A	98,3	91,42	70	30	8	3,3	M6	0,854
106 818 30	18	30	A	98,3	91,42	70	30	8	3,3	M6	0,810
106 818 35	18	35	A	98,3	91,42	70	30	10	3,3	M8	0,840
106 818 40	18	40	A	98,3	91,42	70	30	12	3,3	M10	0,772

Tolerances

Bore
from 12 mm to 18 mm: +0.018 / -0
from 19 mm to 30 mm: +0.021 / -0
from 32 mm to 50 mm: +0.025 / -0

Keyway width
from 4 mm to 6 mm: +0.030 / -0
from 8 mm to 10 mm: +0.036 / -0
from 12 mm to 14 mm: +0.043 / -0

Keyway depth
from 1.8 mm to 2.8 mm: +0.10 / -0
from 3.3 mm to 3.8 mm: +0.20 / -0

Sprockets KRF, Teeth Hardened, Pitch 5/8 x 3/8“, ISO 10 B-1

Material: Steel C45.

Ready-to-install, for various shaft diameters.

Teeth milled and induction hardened (HRC 50), custom bore H7 - surface parameter R_a 1.6, keyway in accordance with DIN 6885/1 positioned beneath tip of tooth, 2 threads for set screws, one positioned for the keyway, one offset by 90°.

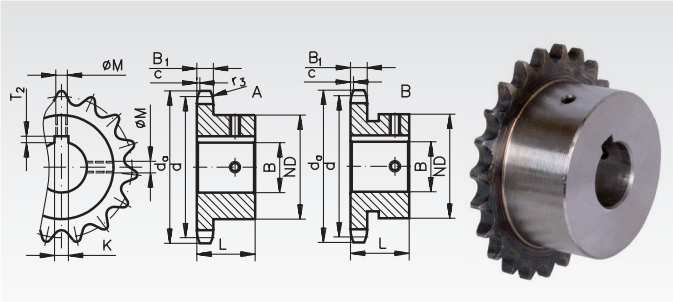

Ordering Details: e.g.: Product No. 106 819 20, Sprocket KRF, Pitch5/8 x 3/8“ , 19 Teeth, 20 mm Bore

Pitch 5/8 x 3/8“, B_1 = 9.1 mm, c = 1.6 mm, r_3 = 16 mm

Product No.	Number of teeth	Bore mm	Type	d_a mm	d mm	ND mm	L mm	K mm	T_2 mm	M	Weight kg
106 819 20	19	20	A	103,3	96,45	60	30	6	2,8	M5	0,800
106 819 25	19	25	A	103,3	96,45	70	30	8	3,3	M6	1,020
106 819 30	19	30	A	103,3	96,45	70	30	8	3,3	M6	0,870
106 819 35	19	35	A	103,3	96,45	70	30	10	3,3	M8	0,808
106 819 40	19	40	A	103,3	96,45	70	30	12	3,3	M10	0,834
106 820 20	20	20	A	108,4	101,49	65	30	6	2,8	M5	1,036
106 820 25	20	25	A	108,4	101,49	70	30	8	3,3	M6	1,070
106 820 30	20	30	A	108,4	101,49	75	30	8	3,3	M6	1,116
106 820 35	20	35	A	108,4	101,49	75	30	10	3,3	M8	1,052
106 820 40	20	40	A	108,4	101,49	75	30	12	3,3	M10	0,880
106 821 20	21	20	A	113,4	106,52	65	30	6	2,8	M5	1,084
106 821 25	21	25	A	113,4	106,52	70	30	8	3,3	M6	1,124
106 821 30	21	30	A	113,4	106,52	75	30	8	3,3	M6	1,168
106 821 35	21	35	A	113,4	106,52	75	30	10	3,3	M8	1,106
106 821 40	21	40	A	113,4	106,52	75	30	12	3,3	M10	1,032
106 822 20	22	20	A	118,4	111,55	65	30	6	2,8	M5	1,140
106 822 25	22	25	A	118,4	111,55	70	30	8	3,3	M6	1,186
106 822 30	22	30	A	118,4	111,55	80	30	8	3,3	M6	1,322
106 822 35	22	35	A	118,4	111,55	80	30	10	3,3	M8	1,264
106 822 40	22	40	A	118,4	111,55	80	30	12	3,3	M10	1,184
106 823 20	23	20	A	123,5	116,58	65	30	6	2,8	M5	1,216
106 823 25	23	25	A	123,5	116,58	70	30	8	3,3	M6	1,250
106 823 30	23	30	A	123,5	116,58	80	30	8	3,3	M6	1,382
106 823 35	23	35	A	123,5	116,58	80	30	10	3,3	M8	1,332
106 823 40	23	40	A	123,5	116,58	80	30	12	3,3	M10	1,258
106 824 20	24	20	A	128,5	121,62	65	30	6	2,8	M5	1,278
106 824 25	24	25	A	128,5	121,62	70	30	8	3,3	M6	1,328
106 824 30	24	30	A	128,5	121,62	80	30	8	3,3	M6	1,454
106 824 35	24	35	A	128,5	121,62	80	30	10	3,3	M8	1,388
106 824 40	24	40	A	128,5	121,62	80	30	12	3,3	M10	1,328
106 825 20	25	20	A	133,6	126,66	65	30	6	2,8	M5	1,352
106 825 25	25	25	A	133,6	126,66	70	30	8	3,3	M6	1,388
106 825 30	25	30	A	133,6	126,66	80	30	8	3,3	M6	1,530
106 825 35	25	35	A	133,6	126,66	80	30	10	3,3	M8	1,472
106 825 40	25	40	A	133,6	126,66	80	30	12	3,3	M10	1,400

Tolerances

Bore
from 12 mm to 18 mm: +0.018 / -0
from 19 mm to 30 mm: +0.021 / -0
from 32 mm to 50 mm: +0.025 / -0

Keyway width
from 4 mm to 6 mm: +0.030 / -0
from 8 mm to 10 mm: +0.036 / -0
from 12 mm to 14 mm: +0.043 / -0

Keyway depth
from 1.8 mm to 2.8 mm: +0.10 / -0
from 3.3 mm to 3.8 mm: +0.20 / -0

Sprockets KRF, Teeth Hardened, Pitch 3/4 x 7/16", ISO 12 B-1

Material: Steel C45.

Ready-to-install, for various shaft diameters.

Teeth milled and induction hardened (HRC 50), custom bore H7 - surface parameter R_a 1.6, keyway in accordance with DIN 6885/1 positioned beneath tip of tooth, 2 threads for set screws, one positioned for the keyway, one offset by 90°.

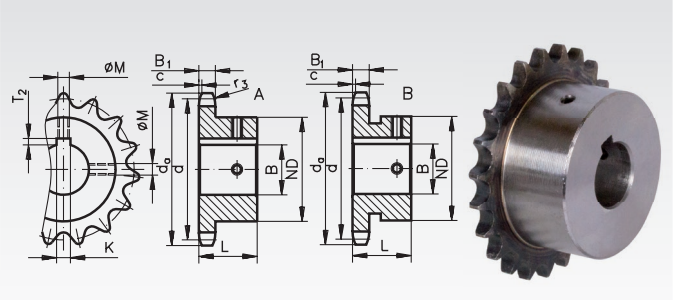

Ordering Details: e.g.: Product No. 107 810 20, Sprocket KRF, Pitch 3/4 x 7/16" , 10 Teeth, 20 mm Bore

Pitch 3/4 x 7/16", B_1 = 11.1 mm, c = 2 mm, r_3 = 19 mm

Product No.	Number of teeth	Bore mm	Type	d_a mm	d mm	ND mm	L mm	K mm	T_2 mm	M	Weight kg
107 810 20	10	20	A	69,8	61,64	42	30	6	2,8	M5	0,358
107 810 25	10	25	A	69,8	61,64	42	30	8	3,3	M6	0,316
107 811 20	11	20	A	75,8	67,61	46	35	6	2,8	M5	0,504
107 811 25	11	25	A	75,8	67,61	46	35	8	3,3	M6	0,452
107 812 20	12	20	A	81,8	73,60	52	35	6	2,8	M5	0,656
107 812 25	12	25	A	81,8	73,60	52	35	8	3,3	M6	0,604
107 812 30	12	30	A	81,8	73,60	52	35	8	3,3	M6	0,546
107 812 35	12	35	A	81,8	73,60	56	35	10	3,3	M8	0,536
107 813 20	13	20	A	87,8	79,59	58	35	6	2,8	M5	0,812
107 813 25	13	25	A	87,8	79,59	58	35	8	3,3	M6	0,758
107 813 30	13	30	A	87,8	79,59	58	35	8	3,3	M6	0,688
107 813 35	13	35	A	87,8	79,59	58	35	10	3,3	M8	0,624
107 814 20	14	20	A	93,8	85,61	60	35	6	2,8	M5	0,806
107 814 24	14	24	A	93,8	85,61	64	35	8	3,3	M6	0,836
107 814 25	14	25	A	93,8	85,61	64	35	8	3,3	M6	0,830
107 814 28	14	28	A	93,8	85,61	64	35	8	3,3	M6	0,888
107 814 30	14	30	A	93,8	85,61	64	35	8	3,3	M6	0,800
107 814 35	14	35	A	93,8	85,61	64	35	10	3,3	M8	0,786
107 815 20	15	20	A	99,8	91,63	65	35	6	2,8	M5	1,076
107 815 25	15	25	A	99,8	91,63	70	35	8	3,3	M6	1,126
107 815 28	15	28	A	99,8	91,63	70	35	8	3,3	M6	1,080
107 815 30	15	30	A	99,8	91,63	70	35	8	3,3	M6	1,064
107 815 35	15	35	A	99,8	91,63	70	35	10	3,3	M8	0,880
107 815 40	15	40	A	99,8	91,63	70	35	12	3,3	M10	0,808
107 816 20	16	20	A	105,8	97,65	65	35	6	2,8	M5	1,154
107 816 24	16	24	A	105,8	97,65	70	35	8	3,3	M6	1,216
107 816 25	16	25	A	105,8	97,65	70	35	8	3,3	M6	1,188
107 816 30	16	30	A	105,8	97,65	75	35	8	3,3	M6	1,248
107 816 35	16	35	A	105,8	97,65	75	35	10	3,3	M8	1,160
107 816 40	16	40	A	105,8	97,65	75	35	12	3,3	M10	1,080
107 817 25	17	25	A	111,9	103,67	70	35	8	3,3	M6	1,280
107 817 30	17	30	A	111,9	103,67	80	35	8	3,3	M6	1,434
107 817 35	17	35	A	111,9	103,67	80	35	10	3,3	M8	1,372
107 817 40	17	40	A	111,9	103,67	80	35	12	3,3	M10	1,278
107 818 25	18	25	A	117,9	109,71	70	35	8	3,3	M6	1,368
107 818 30	18	30	A	117,9	109,71	80	35	8	3,3	M6	1,520
107 818 35	18	35	A	117,9	109,71	80	35	10	3,3	M8	1,450
107 818 40	18	40	A	117,9	109,71	80	35	12	3,3	M10	1,364

Tolerances

Bore
from 12 mm to 18 mm: +0.018 / -0
from 19 mm to 30 mm: +0.021 / -0
from 32 mm to 50 mm: +0.025 / -0

Keyway width
from 4 mm to 6 mm: +0.030 / -0
from 8 mm to 10 mm: +0.036 / -0
from 12 mm to 14 mm: +0.043 / -0

Keyway depth
from 1.8 mm to 2.8 mm: +0.10 / -0
from 3.3 mm to 3.8 mm: +0.20 / -0

Sprockets KRF, Teeth Hardened, Pitch 3/4 x 7/16", ISO 12 B-1

Material: Steel C45.

Ready-to-install, for various shaft diameters.

Teeth milled and induction hardened (HRC 50), custom bore H7 - surface parameter R_a 1.6, keyway in accordance with DIN 6885/1 positioned beneath tip of tooth, 2 threads for set screws, one positioned for the keyway, one offset by 90°.

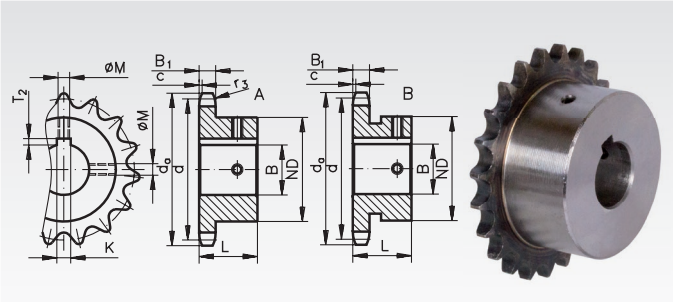

Ordering Details: e.g.: Product No. 107 819 25, Sprocket KRF, Pitch 3/4 x 7/16" , 19 Teeth, 25 mm Bore

Pitch 3/4 x 7/16", B_1 = 11.1 mm, c = 2 mm, r_3 = 19 mm

Product No.	Number of teeth	Bore mm	Type	d_a mm	d mm	ND mm	L mm	K mm	T_2 mm	M	Weight kg
107 819 25	19	25	A	123,9	115,75	70	35	8	3,3	M6	1,448
107 819 30	19	30	A	123,9	115,75	80	35	8	3,3	M6	1,618
107 819 35	19	35	A	123,9	115,75	80	35	10	3,3	M8	1,534
107 819 40	19	40	A	123,9	115,75	80	35	12	3,3	M10	1,460
107 819 50	19	50	A	123,9	115,75	80	35	14	3,8	M12	1,254
107 820 25	20	25	A	130,0	121,78	70	35	8	3,3	M6	1,542
107 820 30	20	30	A	130,0	121,78	80	35	8	3,3	M6	1,716
107 820 35	20	35	A	130,0	121,78	80	35	10	3,3	M8	1,634
107 820 40	20	40	A	130,0	121,78	80	35	12	3,3	M10	1,554
107 820 45	20	45	A	130,0	121,78	80	35	14	3,8	M12	1,450
107 820 50	20	50	A	130,0	121,78	80	35	14	3,8	M12	1,362
107 821 25	21	25	A	136,0	127,82	70	40	8	3,3	M6	1,782
107 821 30	21	30	A	136,0	127,82	80	40	8	3,3	M6	1,868
107 821 35	21	35	A	136,0	127,82	90	40	10	3,3	M8	2,180
107 821 40	21	40	A	136,0	127,82	90	40	12	3,3	M10	2,082
107 821 45	21	45	A	136,0	127,82	90	40	14	3,8	M12	1,878
107 821 50	21	50	A	136,0	127,82	90	40	14	3,8	M12	1,872
107 822 25	22	25	A	142,0	133,86	70	40	8	3,3	M6	1,804
107 822 30	22	30	A	142,0	133,86	80	40	8	3,3	M6	2,086
107 822 35	22	35	A	142,0	133,86	90	40	10	3,3	M8	2,312
107 822 40	22	40	A	142,0	133,86	90	40	12	3,3	M10	2,208
107 822 50	22	50	A	142,0	133,86	90	40	14	3,8	M12	1,886
107 823 25	23	25	A	148,1	139,90	70	40	8	3,3	M6	2,020
107 823 30	23	30	A	148,1	139,90	80	40	8	3,3	M6	2,214
107 823 35	23	35	A	148,1	139,90	90	40	10	3,3	M8	2,414
107 823 40	23	40	A	148,1	139,90	90	40	12	3,3	M10	2,320
107 823 45	23	45	A	148,1	139,90	90	40	14	3,8	M12	2,206
107 823 50	23	50	A	148,1	139,90	90	40	14	3,8	M12	2,102
107 824 30	24	30	A	154,1	145,94	80	40	8	3,3	M6	2,316
107 824 35	24	35	A	154,1	145,94	90	40	10	3,3	M8	2,536
107 824 40	24	40	A	154,1	145,94	90	40	12	3,3	M10	2,436
107 825 25	25	25	A	160,2	152,00	70	40	8	3,3	M6	2,254
107 825 30	25	30	A	160,2	152,00	80	40	8	3,3	M6	2,448
107 825 35	25	35	A	160,2	152,00	90	40	10	3,3	M8	2,666
107 825 40	25	40	A	160,2	152,00	90	40	12	3,3	M10	2,576
107 825 45	25	45	A	160,2	152,00	90	40	14	3,8	M12	2,456
107 825 50	25	50	A	160,2	152,00	90	40	14	3,8	M12	2,364

Tolerances

Bore
from 12 mm to 18 mm: +0.018 / -0
from 19 mm to 30 mm: +0.021 / -0
from 32 mm to 50 mm: +0.025 / -0

Keyway width
from 4 mm to 6 mm: +0.030 / -0
from 8 mm to 10 mm: +0.036 / -0
from 12 mm to 14 mm: +0.043 / -0

Keyway depth
from 1.8 mm to 2.8 mm: +0.10 / -0
from 3.3 mm to 3.8 mm: +0.20 / -0

Sprockets KRF, Teeth Hardened, Pitch 1“ x 17.02 mm, ISO 16 B-1

Material: Steel C45.

Ready-to-install, for various shaft diameters.

Teeth milled and induction hardened (HRC 50), custom bore H7 - surface parameter R_a 1.6, keyway in accordance with DIN 6885/1 positioned beneath tip of tooth, 2 threads for set screws, one positioned for the keyway, one offset by 90°.

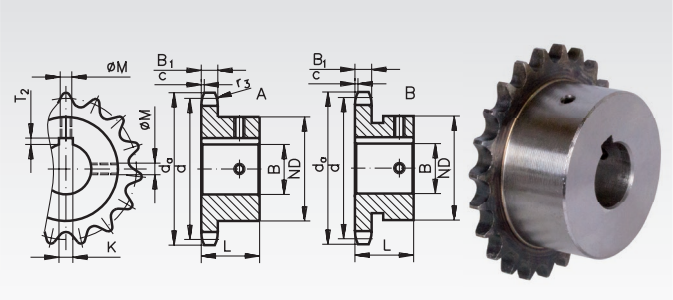

Ordering Details: e.g.: Product No. 108 811 25, Sprocket KRF, Pitch 1“ x 17.02mm, 11 Teeth, 25 mm Bore

Pitch 1“ x 17.02 mm, B_1 = 16.2 mm, c = 2.5 mm, r_3 = 26 mm

Product No.	Number of teeth	Bore mm	Type	d_a mm	d mm	ND mm	L mm	K mm	T_2 mm	M	Weight kg
108 811 25	11	25	A	101,7	90,14	61	40	8	3,3	M6	1,124
108 811 30	11	30	A	101,7	90,14	61	40	8	3,3	M6	1,060
108 811 35	11	35	A	101,7	90,14	61	40	10	3,3	M8	0,876
108 811 40	11	40	A	101,7	90,14	67	40	12	3,3	M10	0,882
108 812 25	12	25	A	109,7	98,14	69	40	8	3,3	M6	1,418
108 812 30	12	30	A	109,7	98,14	69	40	8	3,3	M6	1,350
108 812 35	12	35	A	109,7	98,14	69	40	10	3,3	M8	1,268
108 812 40	12	40	A	109,7	98,14	69	40	12	3,3	M10	1,166
108 813 25	13	25	A	117,7	106,12	70	40	8	3,3	M6	1,588
108 813 30	13	30	A	117,7	106,12	78	40	8	3,3	M6	1,626
108 813 35	13	35	A	117,7	106,12	78	40	10	3,3	M8	1,608
108 813 40	13	40	A	117,7	106,12	78	40	12	3,3	M10	1,506
108 814 30	14	30	A	125,7	114,15	80	40	8	3,3	M6	1,820
108 814 35	14	35	A	125,7	114,15	84	40	10	3,3	M8	1,812
108 814 40	14	40	A	125,7	114,15	84	40	12	3,3	M10	1,830
108 814 45	14	45	A	125,7	114,15	84	40	14	3,8	M12	1,712
108 814 50	14	50	A	125,7	114,15	84	40	14	3,8	M12	1,606
108 815 25	15	25	A	133,7	122,17	70	40	8	3,3	M6	1,842
108 815 30	15	30	A	133,7	122,17	80	40	8	3,3	M6	2,088
108 815 35	15	35	A	133,7	122,17	82	40	10	3,3	M8	2,302
108 815 40	15	40	A	133,7	122,17	82	40	12	3,3	M10	2,210
108 815 45	15	45	A	133,7	122,17	82	40	14	3,8	M12	2,078
108 815 50	15	50	A	133,7	122,17	82	40	14	3,8	M12	1,888
108 816 25	16	25	A	141,8	130,20	80	45	8	3,3	M6	2,544
108 816 30	16	30	A	141,8	130,20	80	45	8	3,3	M6	2,468
108 816 35	16	35	A	141,8	130,20	100	45	10	3,3	M8	3,010
108 816 40	16	40	A	141,8	130,20	100	45	12	3,3	M10	2,880
108 816 45	16	45	A	141,8	130,20	100	45	14	3,8	M12	2,776
108 816 50	16	50	A	141,8	130,20	100	45	14	3,8	M12	2,648
108 817 30	17	30	A	149,8	138,22	100	45	8	3,3	M6	2,666
108 817 35	17	35	A	149,8	138,22	100	45	10	3,3	M8	3,214
108 817 40	17	40	A	149,8	138,22	100	45	12	3,3	M10	3,086
108 817 45	17	45	A	149,8	138,22	100	45	14	3,8	M12	2,866

Tolerances

Bore
from 12 mm to 18 mm: +0.018 / -0
from 19 mm to 30 mm: +0.021 / -0
from 32 mm to 50 mm: +0.025 / -0

Keyway width
from 4 mm to 6 mm: +0.030 / -0
from 8 mm to 10 mm: +0.036 / -0
from 12 mm to 14 mm: +0.043 / -0

Keyway depth
from 1.8 mm to 2.8 mm: +0.10 / -0
from 3.3 mm to 3.8 mm: +0.20 / -0

Sprockets KRF, Teeth Hardened, Pitch 1“ x 17.02 mm, ISO 16 B-1

Material: Steel C45.

Ready-to-install, for various shaft diameters.

Teeth milled and induction hardened (HRC 50), custom bore H7 - surface parameter R_a 1.6, keyway in accordance with DIN 6885/1 positioned beneath tip of tooth, 2 threads for set screws, one positioned for the keyway, one offset by 90°.

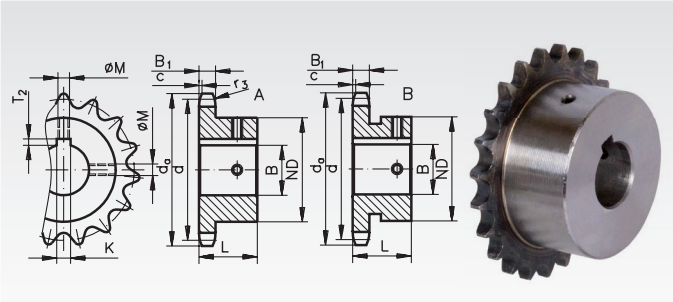

Ordering Details: e.g.: Product No. 108 817 50, Sprocket KRF, Pitch 1“ x 17.02mm, 17 Teeth, 50 mm Bore

Pitch 1“ x 17.02 mm, B_1 = 16.2 mm, c = 2.5 mm, r_3 = 26 mm

Product No.	Number of teeth	Bore mm	Type	d_a mm	d mm	ND mm	L mm	K mm	T_2 mm	M	Weight kg
108 817 50	17	50	A	149,8	138,22	100	45	14	3,8	M12	2,842
108 818 30	18	30	A	157,8	146,28	80	45	8	3,3	M6	2,888
108 818 35	18	35	A	157,8	146,28	100	45	10	3,3	M8	3,416
108 818 40	18	40	A	157,8	146,28	100	45	12	3,3	M10	3,322
108 818 45	18	45	A	157,8	146,28	100	45	14	3,8	M12	3,188
108 818 50	18	50	A	157,8	146,28	100	45	14	3,8	M12	3,062
108 819 30	19	30	A	165,9	154,33	80	45	8	3,3	M6	3,122
108 819 35	19	35	A	165,9	154,33	100	45	10	3,3	M8	3,670
108 819 40	19	40	A	165,9	154,33	100	45	12	3,3	M10	3,558
108 819 50	19	50	A	165,9	154,33	100	45	14	3,8	M12	3,286
108 820 30	20	30	A	173,9	162,38	80	45	8	3,3	M6	3,372
108 820 35	20	35	A	173,9	162,38	100	45	10	3,3	M8	3,802
108 820 40	20	40	A	173,9	162,38	100	45	12	3,3	M10	3,782
108 820 50	20	50	A	173,9	162,38	100	45	14	3,8	M12	3,552
108 821 30	21	30	A	182,0	170,43	80	50	8	3,3	M6	3,812
108 821 35	21	35	A	182,0	170,43	100	50	10	3,3	M8	4,446
108 821 40	21	40	A	182,0	170,43	110	50	12	3,3	M10	4,752
108 821 50	21	50	A	182,0	170,43	110	50	14	3,8	M12	4,480
108 822 30	22	30	A	190,1	178,48	80	50	8	3,3	M6	4,078
108 822 35	22	35	A	190,1	178,48	100	50	10	3,3	M8	4,716
108 822 40	22	40	A	190,1	178,48	110	50	12	3,3	M10	5,042
108 823 30	23	30	A	198,1	186,53	80	50	8	3,3	M6	4,350
108 823 40	23	40	A	198,1	186,53	110	50	12	3,3	M10	5,320
108 824 30	24	30	A	206,2	194,59	80	50	8	3,3	M6	4,676
108 824 35	24	35	A	206,2	194,59	100	50	10	3,3	M8	5,312
108 824 40	24	40	A	206,2	194,59	110	50	12	3,3	M10	5,630
108 824 45	24	45	A	206,2	194,59	110	50	14	3,8	M12	5,464
108 824 50	24	50	A	206,2	194,59	110	50	14	3,8	M12	5,318
108 825 30	25	30	A	214,2	202,66	80	50	8	3,3	M6	4,874
108 825 35	25	35	A	214,2	202,66	100	50	10	3,3	M8	5,586
108 825 40	25	40	A	214,2	202,66	110	50	12	3,3	M10	5,820
108 825 45	25	45	A	214,2	202,66	110	50	14	3,8	M12	5,766
108 825 50	25	50	A	214,2	202,66	110	50	14	3,8	M12	5,640

Tolerances

Bore
from 12 mm to 18 mm: +0.018 / -0
from 19 mm to 30 mm: +0.021 / -0
from 32 mm to 50 mm: +0.025 / -0

Keyway width
from 4 mm to 6 mm: +0.030 / -0
from 8 mm to 10 mm: +0.036 / -0
from 12 mm to 14 mm: +0.043 / -0

Keyway depth
from 1.8 mm to 2.8 mm: +0.10 / -0
from 3.3 mm to 3.8 mm: +0.20 / -0

Sprockets KRT with One-Sided Hub for Taper Bushes

Material: Steel C45, not hardened.
Sprockets marked with * are made from grey cast iron GG22 with the teeth centred on the wheel body, see drawing.

Pitch 3/8 x 7/32", Z = 57, H = 9.3 mm
Pitch 1/2 x 5/16", Z = 57, H = 12 mm

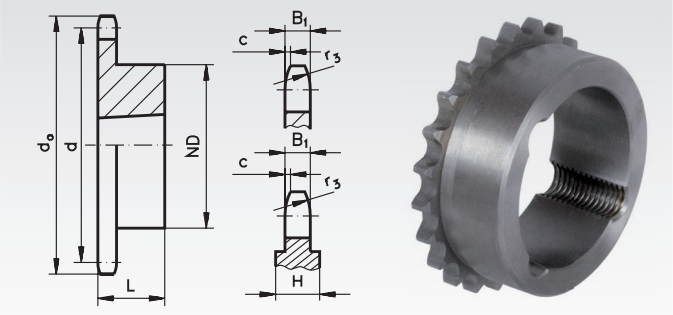

Ordering Details: e.g.: Product No. 101 771 17, KRT, Pitch 3/8 x 7/32", 17 Teeth, Dimension bore with Reference to Taper Bush Type, see page 76.

Pitch 3/8 x 7/32" KRT, ISO 06 B-1, B_1 = 5.3 mm, c = 1,0 mm, r_3 = 10 mm

Product No.	Number of teeth	d_a mm	d mm	ND mm	L mm	Weight g	Taper bush type Page 76
101 771 17	17	55,3	51,83	45	22	120	1008
101 771 18	18	58,3	54,85	45	22	190	1008
101 771 19	19	61,3	57,87	45	22	240	1008
101 771 20	20	64,3	60,89	46	22	290	1008
101 771 21	21	68,0	63,91	46	22	340	1008
101 771 22	22	71,0	66,93	50	22	380	1108
101 771 23	23	73,5	69,95	63	25	430	1210
101 771 24	24	77,0	72,97	63	25	430	1210
101 771 25	25	80,0	76,00	63	25	580	1210
101 771 26	26	83,0	79,02	63	25	530	1210
101 771 27	27	86,0	82,05	63	25	530	1210
101 771 28	28	89,0	85,07	63	25	580	1210
101 771 30	30	94,7	91,12	63	25	580	1210
101 771 38	38	119,5	115,35	70	25	680	1210
101 771 45	45	140,7	136,55	70	25	1010	1210
101 771 57*	57	176,9	172,91	83	25	1440	1210

Pitch 1/2 x 5/16" KRT, ISO 08 B-1, B_1 = 7.2 mm, c = 1,3 mm, r_3 = 13 mm

Product No.	Number of teeth	d_a mm	d mm	ND mm	L mm	Weight g	Taper bush type Page 76
105 771 15	15	65,0	61,09	45	22	190	1008
105 771 16	16	69,5	65,10	50	22	240	1108
105 771 17	17	73,6	69,11	60	25	240	1210
105 771 18	18	77,8	73,14	60	25	290	1210
105 771 19	19	81,7	77,16	63	25	340	1210
105 771 20	20	85,8	81,19	67	25	340	1610
105 771 21	21	89,7	85,22	71	25	380	1610
105 771 22	22	93,8	89,24	71	25	430	1610
105 771 23	23	98,2	93,27	76	25	480	1610
105 771 24	24	101,8	97,29	76	25	670	1610
105 771 25	25	105,8	101,33	76	25	720	1610
105 771 26	26	110,0	105,36	76	25	820	1610
105 771 27	27	114,0	109,40	76	25	860	1610
105 771 28	28	118,0	113,42	90	32	860	2012
105 771 30	30	126,1	121,50	90	32	910	2012
105 771 38	38	158,6	153,80	90	32	1200	2012
105 771 45	45	188,0	182,07	100	32	1680	2012
105 771 57*	57	236,4	230,54	111	32	2780	2012

Pitch 5/8 x 3/8" KRT, ISO 10 B-1, B_1 = 9.1 mm, c = 1.6 mm, r_3 = 16 mm

Product No.	Number of teeth	d_a mm	d mm	ND mm	L mm	Weight kg	Taper bush type Page 76
106 771 13	13	73,0	66,32	47	22	0,24	1008
106 771 14	14	78,0	71,34	52	22	0,29	1108
106 771 15	15	83,0	76,36	60	25	0,34	1210
106 771 16	16	88,0	81,37	70	25	0,34	1610
106 771 17	17	93,0	86,39	71	25	0,38	1610
106 771 18	18	98,3	91,42	71	25	0,43	1610
106 771 19	19	103,3	96,45	75	25	0,62	1610
106 771 20	20	108,4	101,49	76	25	0,77	1610
106 771 21	21	113,4	106,52	76	25	0,72	1610
106 771 22	22	118,0	111,55	76	25	0,77	1610
106 771 23	23	123,4	116,58	76	25	0,96	1610
106 771 24	24	128,3	121,62	90	32	1,06	2012
106 771 25	25	134,0	126,66	90	32	1,15	2012
106 771 26	26	139,0	131,70	90	32	1,20	2012
106 771 27	27	144,0	136,75	90	32	1,25	2012
106 771 28	28	148,7	141,78	90	32	1,34	2012
106 771 30	30	158,8	151,87	90	32	1,54	2012
106 771 38	38	199,2	192,24	100	32	2,40	2012
106 771 45	45	235,0	227,58	100	32	3,12	2012
106 771 57*	57	296,0	288,18	111	32	5,18	2012

Pitch 3/4 x 7/16" KRT, ISO 12 B-1, B_1 = 11.1 mm, c = 2.0 mm, r_3 = 19 mm

Product No.	Number of teeth	d_a mm	d mm	ND mm	L mm	Weight kg	Taper bush type Page 76
107 771 13	13	87,5	79,59	60	25	0,38	1210
107 771 14	14	93,6	85,61	67	25	0,48	1610
107 771 15	15	99,8	91,63	70	25	0,48	1610
107 771 16	16	105,5	97,65	71	25	0,67	1610
107 771 17	17	111,5	103,67	76	25	0,86	1610
107 771 18	18	118,0	109,71	90	32	0,91	2012
107 771 19	19	124,2	115,75	90	32	1,06	2012
107 771 20	20	129,7	121,78	90	32	1,06	2012
107 771 21	21	136,0	127,82	102	45	1,20	2517
107 771 22	22	141,8	133,86	102	45	1,34	2517
107 771 23	23	149,0	139,90	108	45	1,49	2517
107 771 24	24	153,9	145,94	108	45	1,63	2517
107 771 25	25	160,0	152,00	108	45	1,78	2517
107 771 26	26	165,9	158,04	108	45	1,92	2517
107 771 27	27	172,3	164,09	108	45	2,02	2517
107 771 28	28	178,0	170,13	108	45	2,21	2517
107 771 30	30	190,5	182,24	108	45	2,49	2517
107 771 38	38	239,0	230,69	108	45	3,74	2517
107 771 45	45	282,5	273,10	108	45	5,52	2517
107 771 57*	57	354,0	345,81	124	45	9,12	2517

Sprockets KRT with One-Sided Hub for Taper Bushes

Material: Steel C45, not hardened.
Sprockets marked with * are made from grey cast iron GG22 with the teeth centred on the wheel body, see drawing. Z = 57, H = 21 mm.

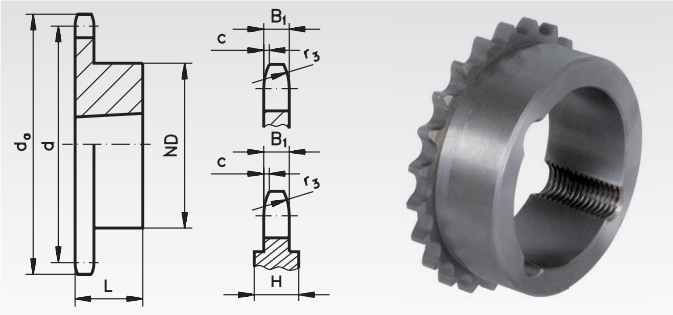

Ordering Details: e.g.: Product No. 108 771 13, KRT, Pitch 1" x 17.02 mm, 13 Teeth, Determine bore size with reference to Taper bush type, see page 76.

Pitch 1" x 17.02 mm, KRT, ISO 16 B-1, B_1 = 16.2 mm, c = 2.5 mm, r_3 = 26 mm

Product No.	Number of teeth	d_a mm	d mm	ND mm	L mm	Weight kg	Taper Bush Type Page 76
108 771 13	13	117,0	106,12	73	25	1,10	1610
108 771 14	14	125,0	114,15	75	25	1,20	1610
108 771 15	15	133,0	122,17	76	25	1,30	1610
108 771 16	16	141,0	130,20	90	32	1,34	2012
108 771 17	17	149,0	138,22	90	32	1,49	2012
108 771 18	18	157,0	146,28	108	44	1,73	2517
108 771 19	19	165,2	154,33	108	44	1,97	2517
108 771 20	20	173,2	162,38	108	44	2,64	2517
108 771 21	21	181,2	170,43	110	44	2,88	2517
108 771 22	22	189,3	178,48	110	44	3,12	2517
108 771 23	23	197,5	186,53	110	44	3,36	2517
108 771 24	24	205,5	194,59	110	44	3,60	2517
108 771 25	25	213,5	202,66	110	44	3,89	2517
108 771 26	26	221,6	210,72	110	44	4,22	2517
108 771 27	27	229,6	218,79	110	44	4,32	2517
108 771 28	28	237,7	226,85	110	44	4,56	2517
108 771 30	30	254,0	243,00	140	51	5,52	3020
108 771 38	38	320,7	307,59	140	51	9,60	3020
108 771 45	45	377,0	364,13	140	51	18,72	3020
108 771 57*	57	474,0	461,08	160	51	20,64	3020

Description and mounting instructions page 824

*

Sprockets marked with * are made from grey cast iron GG22.

Taper bushes page 76

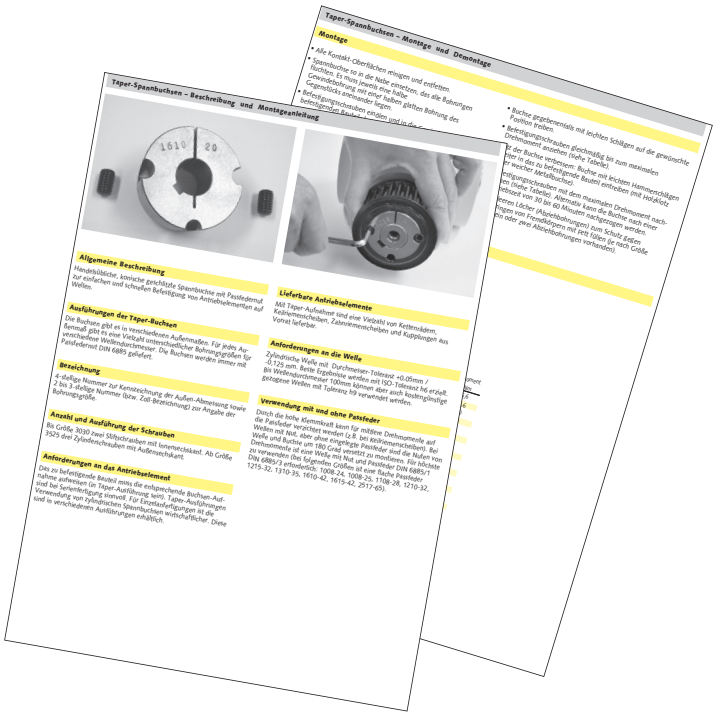

Taper Bushes

Material: GG20.
Bores ISO E8, feather keyways in accordance with DIN 6885/1.
Screws included in delivery.

Shaft tolerance +0.05/-0.125 mm.
Can be used with or without parallel key,
depending on the required torque.

Other bush sizes and bores available at short notice
(some in stock).

Assembly instructions see page 824.

Ordering Details: e.g.: Product No. 622 501 10, Taper Bush 1008, 10 mm Bore

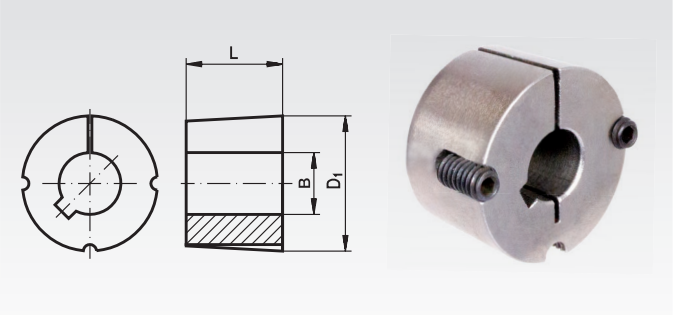

Product No.	Taper bush type	Bore B mm	Key-way mm	L mm	D_1 mm	Weight g
622 501 10	1008	10	3	22,3	35,0	160
622 501 11	1008	11	4	22,3	35,0	140
622 501 12	1008	12	4	22,3	35,0	120
622 501 14	1008	14	5	22,3	35,0	118
622 501 15	1008	15	5	22,3	35,0	116
622 501 16	1008	16	5	22,3	35,0	112
622 501 18	1008	18	6	22,3	35,0	100
622 501 19	1008	19	6	22,3	35,0	98
622 501 20	1008	20	6	22,3	35,0	94
622 501 22	1008	22	6	22,3	35,0	80
622 501 24[1)]	1008	24	8[1)]	22,3	35,0	70
622 501 25[1)]	1008	25	8[1)]	22,3	35,0	68
622 502 10	1108	10	3	22,3	38,0	180
622 502 11	1108	11	4	22,3	38,0	165
622 502 12	1108	12	4	22,3	38,0	154
622 502 14	1108	14	5	22,3	38,0	148
622 502 16	1108	16	5	22,3	38,0	140
622 502 18	1108	18	6	22,3	38,0	132
622 502 19	1108	19	6	22,3	38,0	126
622 502 20	1108	20	6	22,3	38,0	122
622 502 22	1108	22	6	22,3	38,0	112
622 502 24	1108	24	8	22,3	38,0	96
622 502 25	1108	25	8	22,3	38,0	92
622 502 28[1)]	1108	28	8[1)]	22,3	38,0	88
622 503 10	1210	10	3	25,4	47,0	282
622 503 11	1210	11	4	25,4	47,0	280
622 503 12	1210	12	4	25,4	47,0	278
622 503 14	1210	14	5	25,4	47,0	274
622 503 16	1210	16	5	25,4	47,0	262
622 503 18	1210	18	6	25,4	47,0	250
622 503 19	1210	19	6	25,4	47,0	244
622 503 20	1210	20	6	25,4	47,0	240
622 503 22	1210	22	6	25,4	47,0	224
622 503 24	1210	24	8	25,4	47,0	208
622 503 25	1210	25	8	25,4	47,0	208
622 503 28	1210	28	8	25,4	47,0	184
622 503 30	1210	30	8	25,4	47,0	168
622 503 32	1210	32	10	25,4	47,0	160
622 513 14	1215	14	5	38,1	47,0	380
622 513 16	1215	16	5	38,1	47,0	370
622 513 18	1215	18	6	38,1	47,0	350
622 513 19	1215	19	6	38,1	47,0	340
622 513 20	1215	20	6	38,1	47,0	335
622 513 22	1215	22	6	38,1	47,0	320
622 513 24	1215	24	8	38,1	47,0	290
622 513 25	1215	25	8	38,1	47,0	285
622 513 28	1215	28	8	38,1	47,0	260
622 513 30	1215	30	8	38,1	47,0	230
622 513 32	1215	32	10	38,1	47,0	200

Product No.	Taper bush type	Bore B mm	Key-way mm	L mm	D_1 mm	Weight g
622 504 12	1610	12	4	25,4	57,0	416
622 504 14	1610	14	5	25,4	57,0	412
622 504 15	1610	15	5	25,4	57,0	408
622 504 16	1610	16	5	25,4	57,0	402
622 504 18	1610	18	6	25,4	57,0	390
622 504 19	1610	19	6	25,4	57,0	380
622 504 20	1610	20	6	25,4	57,0	373
622 504 22	1610	22	6	25,4	57,0	366
622 504 24	1610	24	8	25,4	57,0	356
622 504 25	1610	25	8	25,4	57,0	348
622 504 28	1610	28	8	25,4	57,0	324
622 504 30	1610	30	8	25,4	57,0	304
622 504 32	1610	32	10	25,4	57,0	280
622 504 35	1610	35	10	25,4	57,0	264
622 504 38	1610	38	10	25,4	57,0	240
622 504 40	1610	40	12	25,4	57,0	210
622 504 42	1610	42	12	25,4	57,0	200
622 508 20	1615	20	6	38,1	57,0	552
622 508 22	1615	22	6	38,1	57,0	540
622 508 24	1615	24	8	38,1	57,0	520
622 508 25	1615	25	8	38,1	57,0	510
622 508 30	1615	30	8	38,1	57,0	446
622 508 32	1615	32	10	38,1	57,0	414
622 508 35	1615	35	10	38,1	57,0	380
622 508 38	1615	38	10	38,1	57,0	346
622 508 40	1615	40	12	38,1	57,0	340
622 508 42[2)]	1615	42	12[2)]	38,1	57,0	260
622 505 12	2012	12	4	31,8	70,0	810
622 505 14	2012	14	5	31,8	70,0	800
622 505 15	2012	15	5	31,8	70,0	785
622 505 16	2012	16	5	31,8	70,0	770
622 505 18	2012	18	6	31,8	70,0	762
622 505 19	2012	19	6	31,8	70,0	756
622 505 20	2012	20	6	31,8	70,0	750
622 505 22	2012	22	6	31,8	70,0	736
622 505 24	2012	24	8	31,8	70,0	724
622 505 25	2012	25	8	31,8	70,0	714
622 505 28	2012	28	8	31,8	70,0	684
622 505 30	2012	30	8	31,8	70,0	658
622 505 32	2012	32	10	31,8	70,0	630
622 505 35	2012	35	10	31,8	70,0	604
622 505 38	2012	38	10	31,8	70,0	566
622 505 40	2012	40	12	31,8	70,0	538
622 505 42	2012	42	12	31,8	70,0	510
622 505 45	2012	45	14	31,8	70,0	460
622 505 48	2012	48	14	31,8	70,0	404
622 505 50	2012	50	14	31,8	70,0	372

[1)] With flat keyway 1.3mm.
[2)] With flat keyway 2.2mm.

Taper Bushes

Material: GG20.
Bores ISO E8, feather keyways in accordance with DIN 6885/1.
Screws included in delivery.

Shaft tolerance +0.05/-0.125 mm.
Can be used with or without parallel key,
depending on the required torque.

Other bush sizes and bores available at short notice
(some in stock).

Ordering Details: e.g.: Product No. 622 506 16, Taper Bush 2517, 16 mm Bore

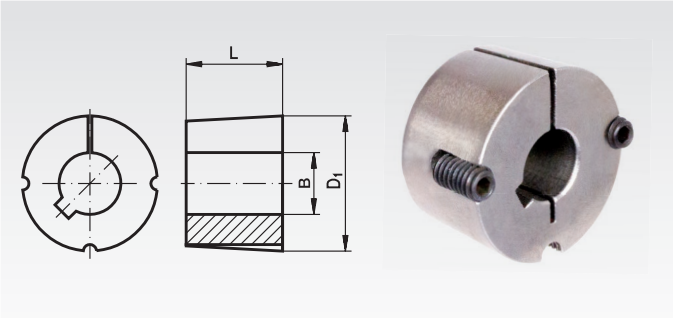

Product No.	Taper bush type	Bore B mm	Key-way mm	L mm	D_1 mm	Weight g
622 506 16	2517	16	5	44,5	85,0	1800
622 506 18	2517	18	6	44,5	85,0	1700
622 506 19	2517	19	6	44,5	85,0	1620
622 506 20	2517	20	6	44,5	85,0	1602
622 506 22	2517	22	6	44,5	85,0	1568
622 506 24	2517	24	8	44,5	85,0	1566
622 506 25	2517	25	8	44,5	85,0	1556
622 506 28	2517	28	8	44,5	85,0	1520
622 506 30	2517	30	8	44,5	85,0	1488
622 506 32	2517	32	10	44,5	85,0	1450
622 506 35	2517	35	10	44,5	85,0	1396
622 506 38	2517	38	10	44,5	85,0	1346
622 506 40	2517	40	12	44,5	85,0	1316
622 506 42	2517	42	12	44,5	85,0	1274
622 506 45	2517	45	14	44,5	85,0	1204
622 506 48	2517	48	14	44,5	85,0	1126
622 506 50	2517	50	14	44,5	85,0	1080
622 506 55	2517	55	16	44,5	85,0	958
622 506 60	2517	60	18	44,5	85,0	810
622 506 65[1)]	2517	65	18[1)]	44,5	85,0	650
622 507 25	3020	25	8	50,8	108,0	2910
622 507 28	3020	28	8	50,8	108,0	2790
622 507 30	3020	30	8	50,8	108,0	2840
622 507 32	3020	32	10	50,8	108,0	2800
622 507 35	3020	35	10	50,8	108,0	2745
622 507 38	3020	38	10	50,8	108,0	2700
622 507 40	3020	40	12	50,8	108,0	2635
622 507 42	3020	42	12	50,8	108,0	2594
622 507 45	3020	45	14	50,8	108,0	2515
622 507 48	3020	48	14	50,8	108,0	2425
622 507 50	3020	50	14	50,8	108,0	2370
622 507 55	3020	55	16	50,8	108,0	2234
622 507 60	3020	60	18	50,8	108,0	2000
622 507 65	3020	65	18	50,8	108,0	1888
622 507 70	3020	70	20	50,8	108,0	1700
622 507 75	3020	75	20	50,8	108,0	1485

[1)] With flat keyway 3.3mm.

Product No.	Taper bush type	Bore B mm	Key-way mm	L mm	D_1 mm	Weight g
622 511 40	3030	40	12	76,2	108,0	3820
622 511 45	3030	45	14	76,2	108,0	3550
622 511 50	3030	50	14	76,2	108,0	3420
622 511 60	3030	60	18	76,2	108,0	2950
622 511 65	3030	65	18	76,2	108,0	2680
622 511 70	3030	70	20	76,2	108,0	2060
622 511 75	3030	75	20	76,2	108,0	1640
622 509 35	3525	35	10	64,9	127,0	4910
622 509 38	3525	38	10	64,9	127,0	4850
622 509 40	3525	40	12	64,9	127,0	4800
622 509 50	3525	50	14	64,9	127,0	4440
622 509 60	3525	60	18	64,9	127,0	4050
622 509 75	3525	75	20	64,9	127,0	3370
622 509 80	3525	80	22	64,9	127,0	3050
622 510 50	3535	50	14	88,9	127,0	6050
622 510 55	3535	55	16	88,9	127,0	5810
622 510 60	3535	60	18	88,9	127,0	5500
622 510 65	3535	65	18	88,9	127,0	5200
622 510 70	3535	70	20	88,9	127,0	4880
622 510 75	3535	75	20	88,9	127,0	4460
622 510 80	3535	80	22	88,9	127,0	4080
622 510 90	3535	90	25	88,9	127,0	3210

Other bush sizes on request.

Assembly Instructions Page 824

Spare screws for Taper Bushes

Material: Steel.

Supply: One screw (order quantity as needed).

Taper bushes have two or (from size 3030) three screws depending on size.

Ordering Details: e.g.: Product No. 622 501 99, Spare Screw , Taper Bush 1008 and 1108

Product No.	to match Taper bush	Size inch	Screw type	Tightening Torque Nm	Weight g
622 501 99	1008 and 1108	1/4''	Set screw with internal hexagon	5.6	1.9
622 503 99	1210 to 1615	3/8''	Set screw with internal hexagon	20	5.2
622 505 99	2012 and 2017	7/16''	Set screw with internal hexagon	30	11
622 506 99	2517 and 2525	1/2''	Set screw with internal hexagon	50	16.4
622 507 99	3020 and 3030	5/8''	Set screw with internal hexagon	90	33.2
622 510 99	3525 and 3535	1/2''	Screw with internal hexagon	90	49.7

Welding Hubs for Taper Bushes

Material: Steel (St52 or comparable), good weldable.

Hub for fixing a chain plate wheel or similar parts with a low priced taper bush onto a shaft.
Taper bush and chain plate wheel have to be ordered separately.
Recommended bore tolerance: H8.

Before welding, a taper bush should be mounted with a piece of shaft into the welding hub to avoid deforming by heat.

Other sizes for taper bushes up to type 5050 are available at short delivery time.

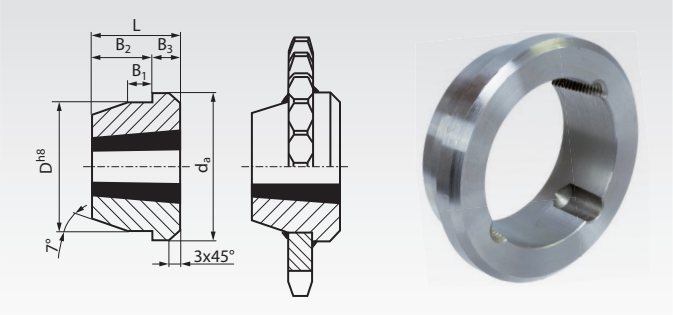

Ordering Details: e.g.: Product No. 140 901 01, Welding Hub for Taper Bush 1210

Product No.	For Taper Bush Type	d_a mm	D^{h8} mm	B_1 mm	B_2 mm	B_3 mm	L mm	Weight kg
140 901 01	1210	73	60	10	16	9	25	0,31
140 901 02	1215	76	60	11	22	16	38	0,50
140 901 03	1610	83	70	10	16	9	25	0,37
140 901 04	1615	83	70	11	22	16	38	0,60
140 901 05	2012	96	90	12	22	10	32	0,72
140 901 06	2517	127	110	13	26	19	45	1,8
140 901 07	3020	152	130	18	27	24	51	2,6
140 901 08	3030	152	130	19	51	25	76	3,6
140 901 09	3525	184	155	25	40	25	65	7,3
140 901 10	3535	184	155	25	57	32	89	6,4

Taper Bushes page 76

Sprockets KRS with One-Sided Hub, Pitch 4mm and 5mm

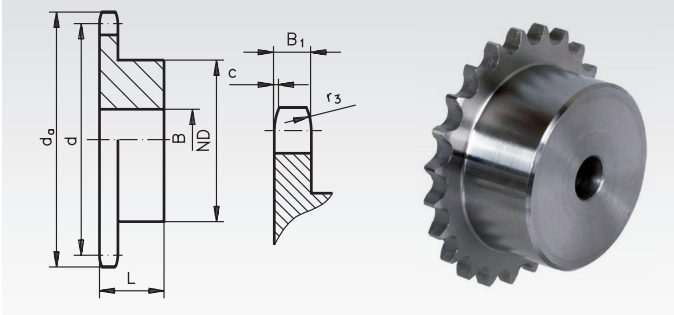

Material: Low-carbon steel, not hardable.
Pre-bored.

Ordering Details: e.g.: Product No. 100 012 00, KRS, Pitch 4 mm, 12 Teeth

Pitch 4 mm KRS,
B_1 = 2.45 mm, c = 0.33 mm, r_3 = 3.75 mm

Product No.	Number of teeth	d_a mm	d mm	ND mm	B mm	L mm	Weight g
100 012 00	12	16,9	15,45	10	5	11	8
100 013 00	13	18,2	16,71	11	5	12	8
100 014 00	14	19,5	17,98	12,5	5	12	11
100 015 00	15	20,8	19,24	13,5	5	12	14
100 017 00	17	23,4	21,77	16	5	12	19
100 019 00	19	26,0	24,30	18	8	12	22
100 021 00	21	28,5	26,84	20	8	12	28
100 023 00	23	31,1	29,38	22	8	14	41
100 024 00	24	32,4	30,65	25	8	14	51
100 025 00	25	33,7	31,94	25	8	14	52
100 030 00	30	40,1	38,27	28	8	14	71
100 038 00	38	50,3	48,44	32	8	16	112
100 045 00	45	59,2	57,34	38	8	16	161
100 057 00	57	74,5	72,61	50	8	16	276
100 076 00	76	98,7	96,79	63	8	18	508
100 083 00	95	122,9	121,00	63	10	18	582
100 088 00	114	147,1	145,17	63	10	20	708

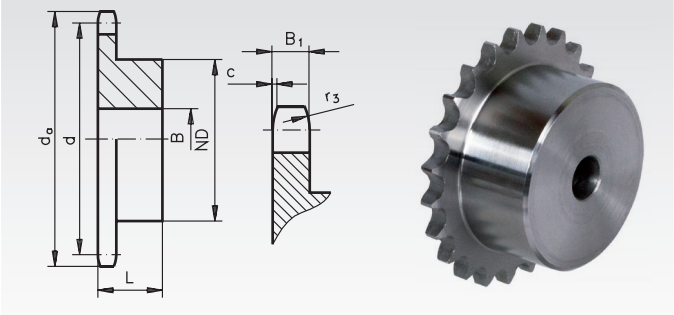

Material: Low-carbon steel, not hardable.
Pre-bored.

Ordering Details: e.g.: Product No. 100 311 00, KRS, Pitch 5 mm, 11 Teeth

Pitch 5 mm KRS, ISO 03,
B_1= 2.3 mm, c= 0.5 mm, r_3= 5 mm

Product No.	Number of teeth	d_a mm	d mm	ND mm	B mm	L mm	Weight g
100 311 00	11	19,8	17,75	11	6	10	9
100 312 00	12	21,4	19,32	12	6	10	13
100 313 00	13	22,9	20,89	14	6	10	17
100 314 00	14	24,5	22,47	15	6	10	19
100 315 00	15	26,1	24,04	16	6	10	21
100 317 00	17	29,3	27,20	18	8	13	28
100 319 00	19	32,5	30,38	18	8	13	47
100 321 00	21	35,7	33,54	20	8	13	57
100 323 00	23	38,9	36,72	20	8	13	76
100 325 00	25	42,1	39,89	20	8	13	90
100 330 00	30	50,1	47,83	25	8	15	158
100 338 00	38	62,8	60,54	30	8	15	207
100 345 00	45	74,0	71,68	55	10	16	314
100 357 00	57	93,1	90,76	63	12	16	431

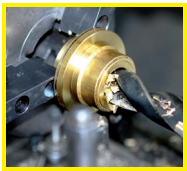

Reworking within 24h-service possible. Custom made parts on request.

Sprockets KRS with One-Sided Hub, ISO 04

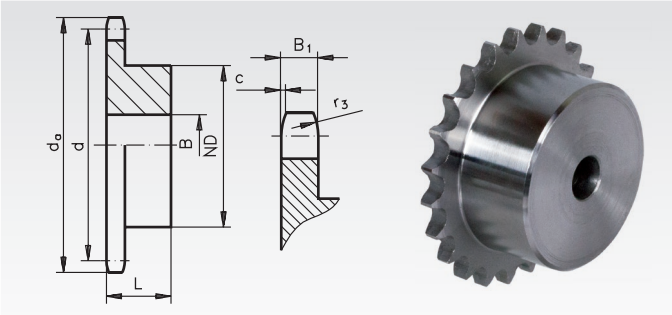

Material: Low-carbon steel, not hardable. Pre-bored.
Sprockets marked with 1) made from St52 with welded in hub.

Ordering Details: e.g.: Product No. 100 608 00, KRS, Pitch 6 mm, 8 Teeth

Pitch 6 mm KRS, B_1 = 2.6 mm, c = 0.7 mm, r_3 = 6 mm

Product No.	Number of teeth	d_a mm	d mm	ND mm	B mm	L mm	Weight g
100 608 00	8	18,0	15,67	9,8	5	10	6
100 609 00	9	19,9	17,54	11,5	5	10	8
100 610 00	10	21,7	19,42	13	6	10	10
100 611 00	11	23,6	21,30	14	6	10	12
100 612 00	12	25,4	23,18	16	6	10	17
100 613 00	13	27,3	25,05	18	8	10	19
100 614 00	14	29,2	26,96	20	8	10	24
100 615 00	15	31,0	28,86	20	8	10	25
100 616 00	16	33,0	30,76	20	8	13	33
100 617 00	17	35,0	32,65	20	8	13	35
100 618 00	18	36,9	34,55	20	8	13	37
100 619 00	19	38,8	36,44	20	8	13	38
100 620 00	20	40,7	38,34	20	8	13	42
100 621 00	21	42,6	40,25	25	8	13	56
100 622 00	22	44,5	42,16	25	8	13	60
100 623 00	23	46,4	44,06	25	8	13	63
100 624 00	24	48,3	45,96	25	8	13	64
100 625 00	25	50,2	47,87	25	8	13	65
100 626 00	26	52,1	49,76	30	8	15	98
100 627 00	27	54,0	51,67	30	8	15	101
100 628 00	28	55,9	53,58	30	8	15	103
100 630 00	30	59,8	57,42	30	8	15	111
100 632 00	32	63,6	61,21	30	10	15	118
100 635 00	35	69,3	66,93	30	10	15	126
100 636 00	36	71,2	68,84	30	10	15	132
100 638 00	38	75,0	72,66	30	10	15	140
100 640 00	40	78,9	76,47	30	10	15	146
100 645 00	45	88,5	86,01	40	10	18	229
100 657 00	57	111,4	108,93	50	12	20	462
100 676 00	76[1)]	147,6	145,19	80	16	34	773

Plate wheels KRL, ISO 04

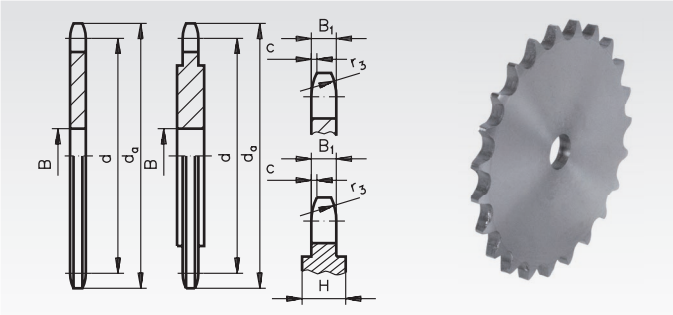

Material: Low-carbon steel, not hardable. Pre-bored.
Pitch 6 mm KRL from a Teeth Number of 54 reinforced (H = 4 mm, see drawing).

Ordering Details: e.g.: Product No. 100 708 00, KRL, Pitch 6 mm, 8 Teeth

Pitch 6 mm KRL, B_1= 2.6 mm, c= 0.7 mm, r_3= 6 mm

Product No.	Number of teeth	d_a mm	d mm	B mm	Weight g
100 708 00	8	18,0	15,67	5	2
100 709 00	9	19,9	17,54	5	3
100 710 00	10	21,7	19,42	6	4
100 711 00	11	23,6	21,30	6	5
100 712 00	12	25,4	23,18	6	6
100 713 00	13	27,3	25,05	8	7
100 714 00	14	29,2	26,96	8	8
100 715 00	15	31,0	28,86	8	10
100 716 00	16	33,0	30,76	8	12
100 717 00	17	35,0	32,65	8	13
100 718 00	18	36,9	34,55	8	15
100 719 00	19	38,8	36,44	8	16
100 720 00	20	40,7	38,34	8	19
100 721 00	21	42,6	40,25	8	21
100 722 00	22	44,5	42,16	8	23
100 723 00	23	46,4	44,06	8	26
100 724 00	24	48,3	45,96	8	29
100 725 00	25	50,2	47,87	8	30
100 726 00	26	52,1	49,77	8	34
100 727 00	27	54,0	51,67	8	35
100 728 00	28	55,9	53,58	8	38
100 730 00	30	59,8	57,42	8	45
100 732 00	32	63,6	61,21	10	47
100 735 00	35	69,3	66,93	10	63
100 736 00	36	71,2	68,84	10	67
100 738 00	38	75,0	72,66	10	75
100 740 00	40	78,9	76,47	10	85
100 742 00	42	82,7	80,28	12	90
100 745 00	45	88,5	86,01	12	108
100 748 00	48	94,2	91,74	12	118
100 750 00	50	98,0	95,55	12	128
100 754 00	54	105,6	103,17	12	220
100 757 00	57	111,4	108,93	12	254
100 760 00	60	117,1	114,62	12	291
100 770 00	70	136,2	133,73	16	401
100 776 00	76	147,6	145,19	16	458
100 780 00	80	155,3	152,82	16	508
100 783 00	95	183,9	181,47	16	732
100 788 00	114	220,2	217,75	16	1070

Reworking within 24h-service possible. Custom made parts on request.

Sprockets KRS with One-Sided Hub, ISO 05 B-1

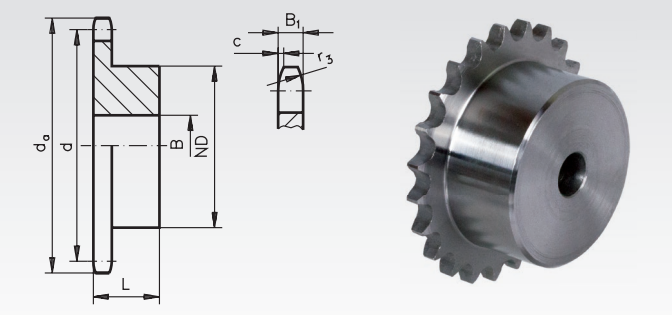

Material: Low-carbon steel, not hardable. Pre-bored.
Sprockets marked with 1) with welded in hub.

Ordering Details: e.g.: Product No. 100 808 00, KRS, Pitch 8 mm, 8 Teeth

Pitch 8 mm KRS,
B_1 = 2.8 mm, c = 1.0 mm, r_3 = 8 mm

Product No.	Number of teeth	d_a mm	d mm	ND mm	B mm	L mm	Weight g
100 808 00	8	24,0	20,90	13	6	12	13
100 809 00	9	26,6	23,39	15	6	12	18
100 810 00	10	29,2	25,89	17	8	12	21
100 811 00	11	31,7	28,39	18	8	13	27
100 812 00	12	34,2	30,91	20	8	13	34
100 813 00	13	36,7	33,42	23	8	13	44
100 814 00	14	39,2	35,95	25	8	13	54
100 815 00	15	41,7	38,48	28	8	13	65
100 816 00	16	44,3	41,01	30	8	14	80
100 817 00	17	46,8	43,53	30	8	14	85
100 818 00	18	49,3	46,07	30	8	14	88
100 819 00	19	51,9	48,61	30	8	14	93
100 820 00	20	54,4	51,14	30	8	14	97
100 821 00	21	57,0	53,68	35	8	14	124
100 822 00	22	59,5	56,21	35	8	14	127
100 823 00	23	62,0	58,75	35	8	14	131
100 824 00	24	64,6	61,29	35	8	14	140
100 825 00	25	67,5	63,83	35	8	14	142
100 826 00	26	69,5	66,37	40	10	16	192
100 827 00	27	72,2	68,91	40	10	16	195
100 828 00	28	74,8	71,45	40	10	16	202
100 830 00	30	79,8	76,53	40	10	16	205
100 832 00	32	84,9	81,61	40	12	16	214
100 835 00	35	92,5	89,25	40	12	16	236
100 836 00	36	95,0	91,79	40	12	16	245
100 838 00	38	100,2	96,88	40	12	16	267
100 840 00	40	105,3	101,97	40	12	16	292
100 845 00	45	118,0	114,69	60	12	20	565
100 857 00	57[1)]	148,6	145,22	80	14	20	1101
100 876 00	76[1)]	197,7	193,59	80	20	25	1749

Sprockets made from stainless steel page 63.

Plate wheels KRL, ISO 05 B-1

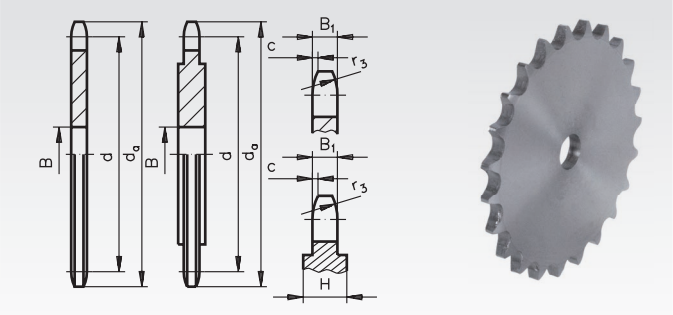

Material: Low-carbon steel, not hardable.
Pre-bored.
Pitch 8 mm KRL from a Teeth Number of 48 reinforced (H = 4 mm, see drawing).

Ordering Details: e.g.: Product No. 100 908 00, KRL Pitch 8 mm, 8 Teeth

Pitch 8 mm KRL,
B_1= 2.8 mm, c= 1.0 mm, r_3= 8 mm

Product No.	Number of teeth	d_a mm	d mm	B mm	Weight g
100 908 00	8	24,0	20,90	6	5
100 909 00	9	26,6	23,39	6	6
100 910 00	10	29,2	25,89	8	9
100 911 00	11	31,7	28,39	8	10
100 912 00	12	34,2	30,91	8	13
100 913 00	13	36,7	33,42	8	15
100 914 00	14	39,2	35,95	8	18
100 915 00	15	41,7	38,48	8	21
100 916 00	16	44,3	41,01	8	24
100 917 00	17	46,8	43,53	8	28
100 918 00	18	49,3	46,07	8	32
100 919 00	19	51,9	48,61	8	36
100 920 00	20	54,4	51,14	8	41
100 921 00	21	57,0	53,68	10	42
100 922 00	22	59,5	56,21	10	48
100 923 00	23	62,0	58,75	10	53
100 924 00	24	64,6	61,29	10	59
100 925 00	25	67,5	63,83	10	64
100 926 00	26	69,5	66,37	10	65
100 927 00	27	72,2	68,91	10	71
100 928 00	28	74,8	71,45	10	81
100 930 00	30	79,8	76,53	10	93
100 932 00	32	84,9	81,61	10	105
100 935 00	35	92,5	89,25	10	122
100 936 00	36	95,0	91,79	10	137
100 938 00	38	100,2	96,88	12	149
100 940 00	40	105,3	101,97	12	173
100 942 00	42	110,4	107,05	12	191
100 945 00	45	118,0	114,69	12	211
100 948 00	48	125,6	122,32	12	340
100 950 00	50	130,7	127,41	12	354
100 954 00	54	140,9	137,59	16	420
100 957 00	57	148,6	145,22	16	475
100 960 00	60	156,2	152,85	16	507
100 965 00	65	169,6	165,58	16	620
100 970 00	70	182,4	178,31	16	680
100 976 00	76	197,7	193,59	20	836
100 980 00	80	207,9	203,77	20	941
100 983 00	95	246,1	241,96	20	1341
100 988 00	114	294,5	290,33	20	1992

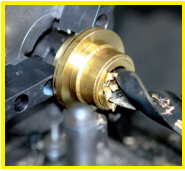

Reworking within 24h-service possible. Custom made parts on request.

Sprockets with One-Sided Hub, ISO 06 B-1

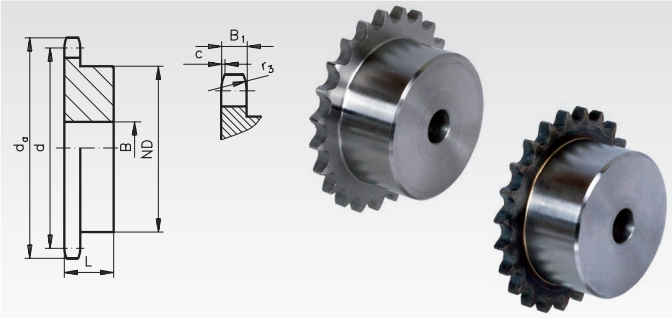

Material: Steel C45, optionally hardened.
Pre-bored.
Sprockets marked with * are made from grey cast iron GG22.

Type KRS: Not hardened. **Type KRG:** Teeth induction hardened.

Ordering Details: e.g.: Product No. 101 108 00, KRS, 3/8 x 7/32", 8 Teeth

Pitch 3/8 x 7/32" KRS and KRG
B_1 = 5.3 mm, c = 1.0 mm, r_3 = 10 mm

Product No. Type KRS	Product No. Type KRG	Number of teeth	d_a mm	d mm	ND mm	B mm	L mm	Weight g
101 108 00	101 881 08	8	28,0	24,89	15	8	22	34
101 109 00	101 881 09	9	31,0	27,85	18	8	22	43
101 110 00	101 881 10	10	34,0	30,82	20	8	22	58
101 111 00	101 881 11	11	37,0	33,80	22	8	25	79
101 112 00	101 881 12	12	40,0	36,80	25	8	25	101
101 113 00	101 881 13	13	43,0	39,79	28	10	25	123
101 114 00	101 881 14	14	46,3	42,80	31	10	25	152
101 115 00	101 881 15	15	49,3	45,81	34	10	25	184
101 116 00	101 881 16	16	52,3	48,82	37	10	28	141
101 117 00	101 881 17	17	55,3	51,83	40	10	28	285
101 118 00	101 881 18	18	58,3	54,85	43	10	28	230
101 119 00	101 881 19	19	61,3	57,87	45	10	28	364
101 120 00	101 881 20	20	64,3	60,89	46	10	28	389
101 121 00	101 881 21	21	68,0	63,91	48	12	28	416
101 122 00	101 881 22	22	71,0	66,93	50	12	28	456
101 123 00	101 881 23	23	73,5	69,95	52	12	28	494
101 124 00	101 881 24	24	77,0	72,97	54	12	28	544
101 125 00	101 881 25	25	80,0	76,00	57	12	28	592
101 126 00	101 881 26	26	83,0	79,02	60	12	28	666
101 127 00	101 881 27	27	86,0	82,05	60	12	28	680
101 128 00	101 881 28	28	89,0	85,07	60	12	28	694
101 130 00	101 881 30	30	94,7	91,12	60	12	30	767
101 132 00	-	32	101,3	97,17	65	14	30	890
101 135 00	-	35	110,4	106,26	65	14	30	948
101 136 00	-	36	113,4	109,29	70	16	30	1024
101 138 00	-	38	119,5	115,35	70	16	30	1109
101 140 00	-	40	125,5	121,40	70	16	30	1160
101 145 00*	-	45	140,7	136,55	70	20	32	1245
101 157 00*	-	57	176,9	172,91	70	20	32	1462
101 176 00*	-	76	234,9	230,49	70	20	32	2177
101 183 00*	-	95	292,5	288,08	80	20	40	3488
101 188 00*	-	114	349,6	345,68	80	20	40	4244

Sprockets marked with * are made from grey cast iron GG22.

Sprockets made from stainless steel page 63.
Sprockets ready-to-mount page 64.
Sprockets for Taper clamping bushes page 74.

Plate wheels KRL, ISO 06 B-1

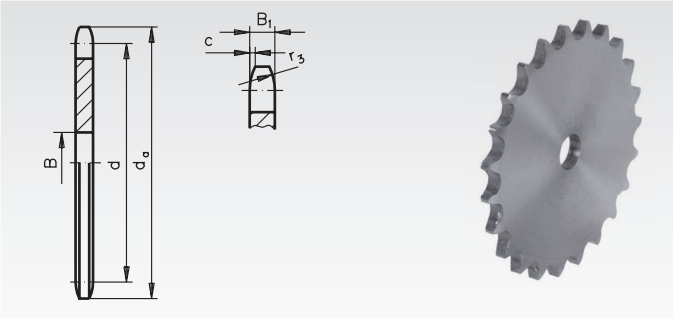

Material: Low-carbon steel, not hardable.
Pre-bored.

Type KRL: Without hub, not hardened.

Ordering Details: e.g.: Product No. 101 208 00, KRL, 3/8 x 7/32", 8 Teeth

Pitch 3/8 x 7/32" KRL
B_1 = 5.3 mm, c = 1.0 mm, r_3 = 10 mm

Product No. Type KRL	Number of teeth	d_a mm	d mm	B mm	Weight g
101 208 00	8	28,0	24,89	6	14
101 209 00	9	31,0	27,85	8	17
101 210 00	10	34,0	30,82	8	23
101 211 00	11	37,0	33,80	8	28
101 212 00	12	40,0	36,80	8	32
101 213 00	13	43,0	39,79	8	39
101 214 00	14	46,3	42,80	8	46
101 215 00	15	49,3	45,81	8	53
101 216 00	16	52,3	48,82	10	62
101 217 00	17	55,3	51,83	10	72
101 218 00	18	58,3	54,85	10	79
101 219 00	19	61,3	57,87	10	89
101 220 00	20	64,3	60,89	10	101
101 221 00	21	68,0	63,91	10	111
101 222 00	22	71,0	66,93	10	123
101 223 00	23	73,5	69,95	10	140
101 224 00	24	77,0	72,97	10	151
101 225 00	25	80,0	76,02	10	160
101 226 00	26	83,0	79,02	10	175
101 227 00	27	86,0	82,05	10	188
101 228 00	28	89,0	85,07	10	202
101 230 00	30	94,7	91,12	10	235
101 232 00	32	101,3	97,17	12	267
101 235 00	35	110,4	106,26	12	326
101 236 00	36	113,4	109,20	12	351
101 238 00	38	119,5	115,35	12	393
101 240 00	40	125,5	121,40	12	422
101 242 00	42	131,6	127,46	16	461
101 244 00	44	137,6	133,52	16	515
101 245 00	45	140,7	136,55	16	534
101 248 00	48	149,7	145,64	16	653
101 250 00	50	155,7	151,69	20	680
101 254 00	54	167,8	163,82	20	842
101 257 00	57	176,9	172,91	20	863
101 260 00	60	186,0	181,99	20	1010
101 265 00	65	201,6	197,15	20	1108
101 270 00	70	216,7	212,30	20	1326
101 272 00	72	222,8	218,37	20	1386
101 276 00	76	234,9	230,49	20	1555
101 280 00	80	247,1	242,61	20	1758
101 283 00	95	292,5	288,08	25	2400
101 288 00	114	349,5	345,68	25	4923

Reworking within 24h-service possible. Custom made parts on request.

Sprockets KRS with One-Sided Hub, ISO 081

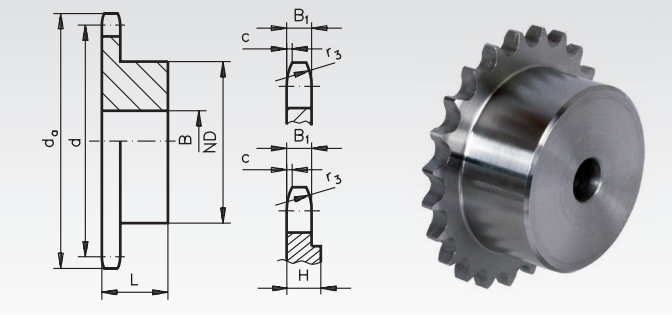

Material: Steel C45, not hardened.
Pre-bored.
Pitch 1/2 x 1/8" KRS from a Teeth Number of 32 reinforced (H = 4 mm, see drawing).

Ordering Details: e.g.: Product No. 102 108 00, KRS, 1/2 x 1/8", 8 Teeth

Pitch 1/2 x 1/8" KRS
B_1 = 3 mm, c = 1.0 mm, r_3 = 13 mm

Product No.	Number of teeth	d_a mm	d mm	ND mm	B mm	L mm	Weight g
102 108 00	8	37,2	33,18	21	8	14	41
102 109 00	9	41,5	37,13	25	8	14	57
102 110 00	10	46,2	41,10	28	8	14	73
102 111 00	11	49,6	45,07	31	8	16	103
102 112 00	12	53,9	49,07	35	8	16	129
102 113 00	13	58,4	53,06	39	8	16	158
102 114 00	14	62,8	57,07	43	8	16	194
102 115 00	15	66,8	61,09	47	8	16	228
102 116 00	16	70,9	65,10	50	10	18	291
102 117 00	17	74,9	69,11	50	10	18	300
102 118 00	18	78,9	73,14	50	10	18	303
102 119 00	19	82,9	77,16	50	10	18	317
102 120 00	20	86,9	81,19	50	10	18	329
102 121 00	21	91,0	85,22	60	12	20	478
102 122 00	22	95,0	89,24	60	12	20	490
102 123 00	23	99,0	93,27	60	12	20	508
102 124 00	24	103,0	97,29	60	12	20	517
102 125 00	25	107,1	101,33	60	12	20	537
102 126 00	26	111,2	105,36	70	16	20	676
102 127 00	27	115,4	109,40	70	16	20	689
102 128 00	28	119,4	113,42	70	16	20	697
102 130 00	30	127,5	121,50	70	16	20	733
102 132 00	32	135,5	129,56	70	16	20	853
102 134 00	34	143,6	137,64	70	16	20	931
102 135 00	35	147,6	141,68	70	16	20	942
102 136 00	36	151,7	145,72	70	16	25	1062
102 138 00	38	159,8	153,80	70	16	25	1178
102 140 00	40	167,8	161,87	70	16	25	1254

Plate wheels KRL, ISO 081

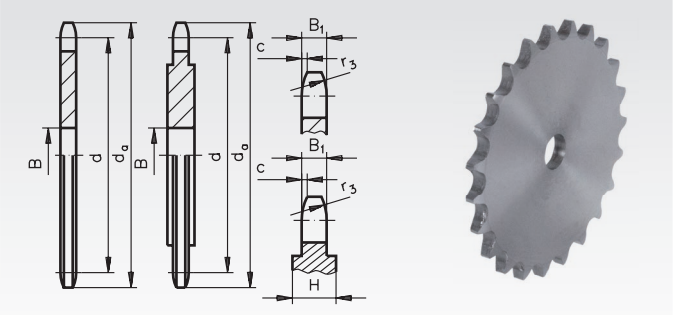

Material: Low-carbon steel, not hardable.
Pre-bored.
Pitch 1/2 x 1/8" KRL from a Teeth Number of 32 reinforced (H = 4 mm, see drawing, from a Teeth Number of 90 H = 6 mm).

Ordering Details: e.g.: Product No. 102 208 00, KRL, 1/2 x 1/8", 8 Teeth

Pitch 1/2 x 1/8" KRL
B_1 = 3 mm, c = 1.0 mm, r_3 = 13 mm

Product No.	Number of teeth	d_a mm	d mm	B mm	Weight g
102 208 00	8	37,2	33,18	8	15
102 209 00	9	41,5	37,13	8	19
102 210 00	10	46,2	41,10	8	26
102 211 00	11	49,6	45,07	8	30
102 212 00	12	53,9	49,07	8	38
102 213 00	13	58,4	53,06	8	45
102 214 00	14	62,8	57,07	8	49
102 215 00	15	66,8	61,09	8	58
102 216 00	16	70,9	65,10	10	66
102 217 00	17	74,9	69,11	10	80
102 218 00	18	78,9	73,14	10	88
102 219 00	19	82,9	77,16	10	101
102 220 00	20	86,9	81,19	10	110
102 221 00	21	91,0	85,22	10	122
102 222 00	22	95,0	89,24	10	139
102 223 00	23	99,0	93,27	10	148
102 224 00	24	103,0	97,29	12	153
102 225 00	25	107,1	101,33	12	187
102 226 00	26	111,2	105,36	12	199
102 227 00	27	115,4	109,40	12	211
102 228 00	28	119,4	113,42	12	222
102 230 00	30	127,5	121,50	12	260
102 232 00	32	135,5	129,56	12	361
102 234 00	34	143,6	137,64	12	435
102 235 00	35	147,6	141,68	12	451
102 236 00	36	151,7	145,72	16	445
102 238 00	38	159,8	153,80	16	398
102 240 00	40	167,8	161,87	16	442
102 242 00	42	175,4	169,95	16	640
102 245 00	45	187,5	182,07	16	705
102 248 00	48	199,7	194,18	20	897
102 250 00	50	207,8	202,26	20	928
102 254 00	54	224,0	218,43	20	1207
102 257 00	57	236,1	230,54	20	1373
102 260 00	60	248,2	242,66	20	1294
102 265 00	65	268,8	262,86	20	1563
102 270 00	70	289,0	283,07	25	1825
102 272 00	72	297,1	291,16	25	1924
102 276 00	76	313,3	307,33	25	2486
102 280 00	80	329,4	323,48	25	2496
102 282 00	90	369,9	363,90	25	4424
102 288 00	114	466,9	460,90	25	6848

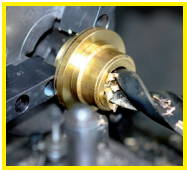

Reworking within 24h-service possible. Custom made parts on request.

Sprockets KRS with One-Sided Hub, ISO 083

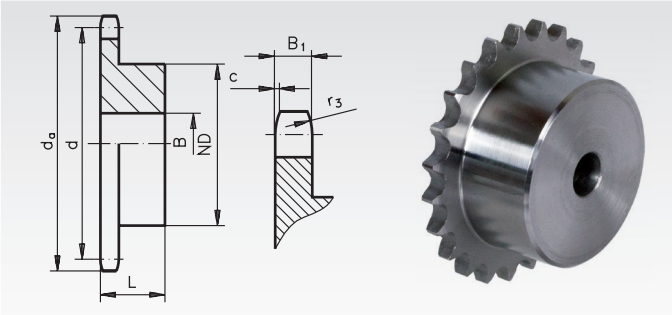

Material: Steel C45, not hardened.
Pre-bored.

Ordering Details: e.g.: Product No. 103 108 00, KRS, 1/2 x 3/16", 8 Teeth

Pitch 1/2 x 3/16" KRS
B_1 = 4.5 mm, c = 1.3 mm, r_3 = 13 mm

Product No.	Number of teeth	d_a mm	d mm	ND mm	B mm	L mm	Weight g
103 108 00	8	38,5	33,18	21	8	14	46
103 109 00	9	41,5	37,13	25	8	14	64
103 110 00	10	46,2	41,10	28	8	14	79
103 111 00	11	49,6	45,07	31	8	16	110
103 112 00	12	53,9	49,07	35	8	16	138
103 113 00	13	58,4	53,06	39	8	16	170
103 114 00	14	62,8	57,07	43	8	16	203
103 115 00	15	66,8	61,09	47	8	16	243
103 116 00	16	70,9	65,10	50	10	18	299
103 117 00	17	74,9	69,11	50	10	18	318
103 118 00	18	78,9	73,14	50	10	18	330
103 119 00	19	82,9	77,16	50	10	18	344
103 120 00	20	86,9	81,19	50	10	18	364
103 121 00	21	91,0	85,22	60	12	20	511
103 122 00	22	95,0	89,24	60	12	20	527
103 123 00	23	99,0	93,27	60	12	20	544
103 124 00	24	103,0	97,29	60	12	20	569
103 125 00	25	107,1	101,33	60	12	20	586
103 126 00	26	111,2	105,36	70	16	20	725
103 127 00	27	115,4	109,40	70	16	20	750
103 128 00	28	119,4	113,42	70	16	20	765
103 130 00	30	127,5	121,50	70	16	20	833
103 132 00	32	135,5	129,56	70	16	20	882
103 134 00	34	143,6	137,64	70	16	20	933
103 135 00	35	147,6	141,68	70	16	20	947
103 136 00	36	151,7	145,72	70	16	25	1103
103 138 00	38	159,8	153,80	70	16	25	1176
103 140 00	40	167,8	161,87	70	16	25	1248

Plate wheels KRL, ISO 083

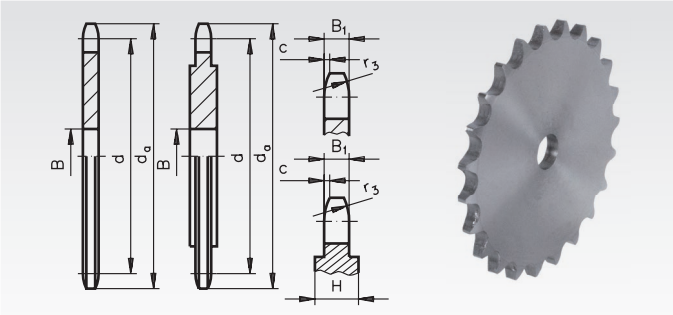

Material: Low-carbon steel, not hardable.
Pre-bored.
Pitch 1/2 x 3/16" KRL from a Teeth Number of 90 reinforced (H = 6 mm, see drawing).

Ordering Details: e.g.: Product No. 103 208 00, KRL, 1/2 x 3/16", 8 Teeth

Pitch 1/2 x 3/16" KRL
B_1 = 4.5 mm, c = 1.3 mm, r_3 = 13 mm

Product No.	Number of teeth	d_a mm	d mm	B mm	Weight g
103 208 00	8	38,5	33,18	8	21
103 209 00	9	41,5	37,13	8	29
103 210 00	10	46,2	41,10	8	36
103 211 00	11	49,6	45,07	8	42
103 212 00	12	53,9	49,07	8	50
103 213 00	13	58,4	53,06	8	61
103 214 00	14	62,8	57,07	8	74
103 215 00	15	66,8	61,09	8	86
103 216 00	16	70,9	65,10	10	99
103 217 00	17	74,9	69,11	10	112
103 218 00	18	78,9	73,14	10	125
103 219 00	19	82,9	77,16	10	140
103 220 00	20	86,9	81,19	10	154
103 221 00	21	91,0	85,22	10	170
103 222 00	22	95,0	89,24	10	180
103 223 00	23	99,0	93,27	10	210
103 224 00	24	103,0	97,29	12	223
103 225 00	25	107,1	101,33	12	251
103 226 00	26	111,2	105,36	12	264
103 227 00	27	115,4	109,40	12	297
103 228 00	28	119,4	113,42	12	306
103 230 00	30	127,5	121,50	12	324
103 232 00	32	135,5	129,56	12	405
103 234 00	34	143,6	137,64	12	454
103 235 00	35	147,6	141,68	12	495
103 236 00	36	151,7	145,72	16	531
103 238 00	38	159,8	153,80	16	566
103 240 00	40	167,8	161,87	16	632
103 242 00	42	175,4	169,95	16	714
103 245 00	45	187,5	182,07	16	773
103 247 00	47	195,6	190,14	20	886
103 248 00	48	199,7	194,18	20	934
103 250 00	50	207,8	202,26	20	975
103 254 00	54	224,0	218,43	20	1170
103 257 00	57	236,1	230,54	20	1348
103 260 00	60	248,2	242,66	20	1490
103 265 00	65	268,8	262,86	20	1657
103 270 00	70	289,0	283,07	25	1898
103 272 00	72	297,1	291,16	25	2119
103 276 00	76	313,3	307,33	25	2339
103 280 00	80	329,4	323,48	25	2364
103 282 00	90	369,9	363,90	25	4672
103 288 00	114	466,9	460,90	25	7284

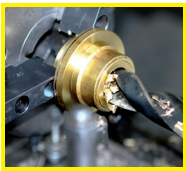

Reworking within 24h-service possible. Custom made parts on request.

Sprockets with One-Sided Hub, ISO 08 B-1

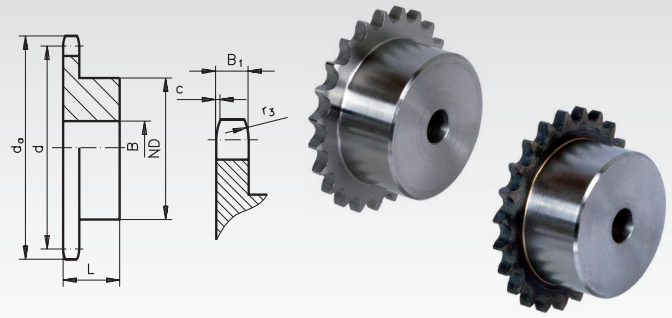

Material: Steel C45, optionally hardened.
Pre-bored.
Sprockets marked with * are made from grey cast iron GG22.

Type KRS: Not hardened. **Type KRG:** Teeth induction hardened.

Ordering Details: e.g.: Product No. 105 108 00, KRS, 1/2 x 5/16", 8 Teeth

Pitch 1/2 x 5/16" KRS and KRG
B_1 = 7.2 mm, c = 1.3 mm, r_3 = 13 mm

Product No. Type KRS	Product No. Type KRG	Number of teeth	d_a mm	d mm	ND mm	B mm	L mm	Weight g
105 108 00	105 881 08	8	37,2	33,18	20	10	25	66
105 109 00	105 881 09	9	41,0	37,13	24	10	25	96
105 110 00	105 881 10	10	45,2	41,10	26	10	25	120
105 111 00	105 881 11	11	48,7	45,07	29	10	25	148
105 112 00	105 881 12	12	53,0	49,07	33	10	28	212
105 113 00	105 881 13	13	57,4	53,06	37	10	28	264
105 114 00	105 881 14	14	61,8	57,07	41	10	28	323
105 115 00	105 881 15	15	65,5	61,09	45	10	28	385
105 116 00	105 881 16	16	69,5	65,10	50	12	28	461
105 117 00	105 881 17	17	73,6	69,11	52	12	28	502
105 118 00	105 881 18	18	77,8	73,14	56	12	28	588
105 119 00	105 881 19	19	81,7	77,16	60	12	28	670
105 120 00	105 881 20	20	85,8	81,19	64	12	28	758
105 121 00	105 881 21	21	89,7	85,22	68	14	28	855
105 122 00	105 881 22	22	93,8	89,24	70	14	28	917
105 123 00	105 881 23	23	98,2	93,27	70	14	28	948
105 124 00	105 881 24	24	101,8	97,29	70	14	28	972
105 125 00	105 881 25	25	105,8	101,33	70	14	28	1002
105 126 00	105 881 26	26	110,0	105,36	70	16	30	1096
105 127 00	105 881 27	27	114,0	109,40	70	16	30	1140
105 128 00	105 881 28	28	118,0	113,42	70	16	30	1167
105 129 00	105 881 29	29	122,0	117,46	80	16	30	1411
105 130 00	105 881 30	30	126,1	121,50	80	16	30	1446
105 132 00	-	32	134,3	129,56	90	16	30	1786
105 134 00	-	34	142,6	137,64	90	16	30	1867
105 135 00	-	35	146,7	141,68	90	16	30	1921
105 136 00	-	36	151,0	145,72	90	16	35	2208
105 138 00	-	38	158,6	153,80	90	16	35	2317
105 140 00	-	40	166,8	161,87	90	16	35	2444
105 145 00*	-	45	188,0	182,07	70	24	40	1977
105 157 00*	-	57	236,4	230,54	70	24	40	2381
105 176 00*	-	76	313,3	307,33	80	24	40	4333
105 183 00*	-	95	390,1	384,11	80	24	45	4871
105 188 00*	-	114	466,9	460,90	80	24	45	7049

Sprockets marked with * are made from grey cast iron GG22.

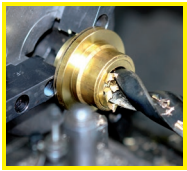

Reworking within 24h-service possible. Custom made parts on request.

Plate wheels KRL, ISO 08 B-1

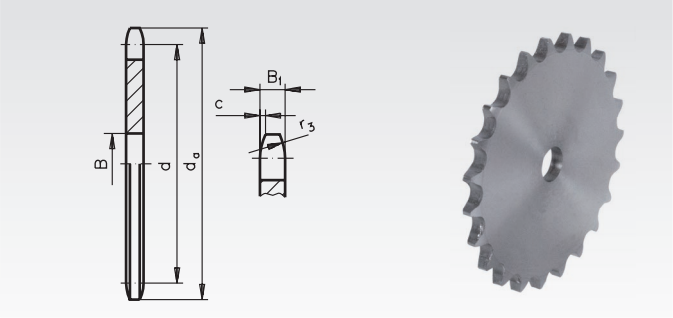

Material: Low-carbon steel, not hardable.
Pre-bored.

Type KRL: Without hub, not hardened.

Ordering Details: e.g.: Product No. 105 208 00, KRL, 1/2 x 5/16", 8 Teeth

Pitch 1/2 x 5/16" KRL
B_1 = 7.2 mm, c = 1.3 mm, r_3 = 13 mm

Product No. Type KRL	Number of teeth	d_a mm	d mm	B mm	Weight g
105 208 00	8	37,2	33,18	8	33
105 209 00	9	41,0	37,13	8	42
105 210 00	10	45,2	41,10	8	54
105 211 00	11	48,7	45,07	10	67
105 212 00	12	53,0	49,07	10	81
105 213 00	13	57,4	53,06	10	96
105 214 00	14	61,8	57,07	10	107
105 215 00	15	65,5	61,09	10	135
105 216 00	16	69,5	65,10	10	153
105 217 00	17	73,6	69,11	10	177
105 218 00	18	77,8	73,14	10	200
105 219 00	19	81,7	77,16	10	230
105 220 00	20	85,8	81,19	10	255
105 221 00	21	89,7	85,22	12	279
105 222 00	22	93,8	89,24	12	312
105 223 00	23	98,2	93,27	12	338
105 224 00	24	101,8	97,29	12	363
105 225 00	25	105,8	101,33	12	392
105 226 00	26	110,0	105,36	16	432
105 227 00	27	114,0	109,40	16	456
105 228 00	28	118,0	113,42	16	500
105 229 00	29	122,0	117,46	16	537
105 230 00	30	126,1	121,50	16	573
105 232 00	32	134,3	129,56	16	664
105 234 00	34	142,6	137,64	16	744
105 235 00	35	146,7	141,68	16	782
105 236 00	36	151,0	145,72	16	828
105 238 00	38	158,6	153,80	16	933
105 240 00	40	166,8	161,87	16	1060
105 242 00	42	175,4	169,95	20	1151
105 244 00	44	183,8	178,03	20	1283
105 245 00	45	188,0	182,07	20	1363
105 246 00	46	192,1	186,10	20	1493
105 248 00	48	200,3	194,18	20	1523
105 250 00	50	208,3	202,26	20	1639
105 254 00	54	224,1	218,43	20	1925
105 257 00	57	236,4	230,54	20	2149
105 260 00	60	248,6	242,66	20	2492
105 265 00	65	269,0	262,86	25	2834
105 270 00	70	289,0	283,07	25	3250
105 272 00	72	297,2	291,16	25	3482
105 276 00	76	313,3	307,33	25	3887
105 280 00	80	329,4	323,48	25	4327
105 283 00	95	390,1	384,11	25	6150
105 288 00	114	466,9	460,90	25	9028
105 290 00	120	491,2	485,16	25	10005

Sprockets made from stainless steel page 63.
Sprockets ready-to-mount page 66.
Sprockets for Taper clamping bushes page 74.

Sprockets with One-Sided Hub, ISO 10 B-1

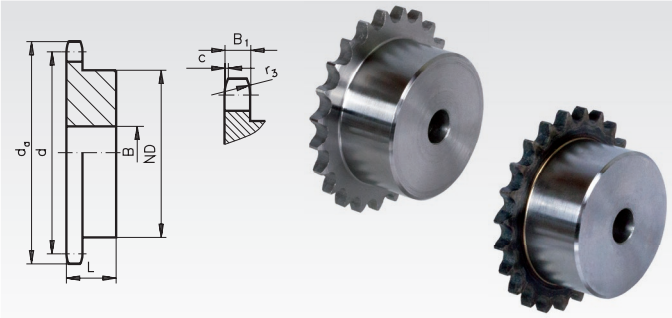

Material: Steel C45, optionally hardened.
Pre-bored.
Sprockets marked with * are made from grey cast iron GG22.

Type KRS: Not hardened. **Type KRG:** Teeth induction hardened.

Ordering Details: e.g.: Product No. 106 108 00, KRS, 5/8 x 3/8", 8 Teeth

Pitch 5/8 x 3/8" KRS and KRG
B_1 = 9.1 mm, c = 1.6 mm, r_3 = 16 mm

Product No. Type KRS	Product No. Type KRG	Number of teeth	d_a mm	d mm	ND mm	B mm	L mm	Weight kg
106 108 00	106 881 08	8	47,0	41,48	25	10	25	0,12
106 109 00	106 881 09	9	52,6	46,42	30	10	25	0,17
106 110 00	106 881 10	10	57,5	51,37	35	10	25	0,23
106 111 00	106 881 11	11	63,0	56,34	37	12	30	0,30
106 112 00	106 881 12	12	68,0	61,34	42	12	30	0,38
106 113 00	106 881 13	13	73,0	66,32	47	12	30	0,47
106 114 00	106 881 14	14	78,0	71,34	52	12	30	0,57
106 115 00	106 881 15	15	83,0	76,36	57	12	30	0,68
106 116 00	106 881 16	16	88,0	81,37	60	12	30	0,76
106 117 00	106 881 17	17	93,0	86,39	60	12	30	0,81
106 118 00	106 881 18	18	98,3	91,42	70	14	30	1,02
106 119 00	106 881 19	19	103,3	96,45	70	14	30	1,07
106 120 00	106 881 20	20	108,4	101,49	75	14	30	1,22
106 121 00	106 881 21	21	113,4	106,52	75	16	30	1,25
106 122 00	106 881 22	22	118,0	111,55	80	16	30	1,40
106 123 00	106 881 23	23	123,4	116,58	80	16	30	1,47
106 124 00	106 881 24	24	128,3	121,62	80	16	30	1,53
106 125 00	106 881 25	25	134,0	126,66	80	16	30	1,59
106 126 00	-	26	139,0	131,70	85	20	35	1,97
106 127 00	-	27	144,0	136,75	85	20	35	2,05
106 128 00	-	28	148,7	141,78	90	20	35	2,24
106 130 00	-	30	158,8	151,87	90	20	35	2,43
106 132 00	-	32	168,9	161,95	95	20	35	2,73
106 134 00	-	34	179,0	172,05	95	20	35	2,90
106 135 00	-	35	184,1	177,10	95	20	35	2,98
106 136 00	-	36	189,1	182,15	100	20	35	3,25
106 138 00	-	38	199,2	192,24	100	20	35	3,47
106 140 00	-	40	209,3	202,34	100	20	35	3,63
106 145 00*	-	45	235,0	227,58	80	24	40	3,05
106 157 00*	-	57	296,0	288,18	90	24	45	4,25
106 176 00*	-	76	392,1	384,16	90	24	50	6,39
106 183 00*	-	95	488,5	480,14	100	24	56	9,66
106 188 00*	-	114	584,1	576,13	100	24	56	13,49

Sprockets marked with * are made from grey cast iron GG22.

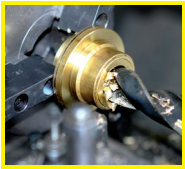

Reworking within 24h-service possible. Custom made parts on request.

Plate wheels KRL, ISO 10 B-1

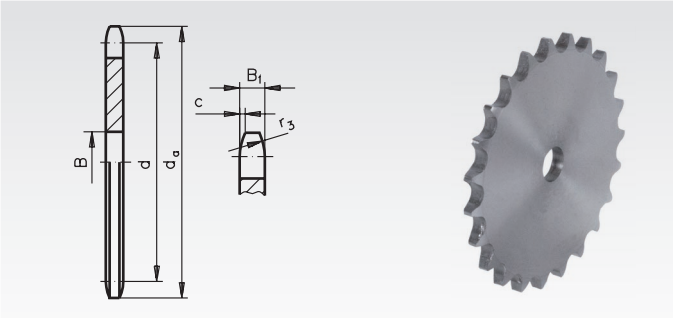

Material: Low-carbon steel, not hardable.
Pre-bored.

Type KRL: Without hub, not hardened.

Ordering Details: e.g.: Product No. 106 208 00, KRL, 5/8 x 3/8", 8 Teeth

Pitch 5/8 x 3/8" KRL
B_1 = 9.1 mm, c = 1.6 mm, r_3 = 16 mm

Product No. Type KRL	Number of teeth	d_a mm	d mm	B mm	Weight kg
106 208 00	8	47,0	41,48	10	0,07
106 209 00	9	52,6	46,42	10	0,09
106 210 00	10	57,7	51,37	10	0,11
106 211 00	11	63,0	56,34	10	0,14
106 212 00	12	68,0	61,34	10	0,17
106 213 00	13	73,0	66,32	10	0,20
106 214 00	14	78,0	71,34	12	0,23
106 215 00	15	83,0	76,36	12	0,27
106 216 00	16	88,0	81,37	12	0,32
106 217 00	17	93,0	86,38	12	0,35
106 218 00	18	98,3	91,42	12	0,40
106 219 00	19	103,3	96,45	12	0,44
106 220 00	20	108,4	101,49	12	0,50
106 221 00	21	113,4	106,52	12	0,56
106 222 00	22	118,0	111,55	12	0,62
106 223 00	23	123,5	116,58	12	0,67
106 224 00	24	128,3	121,62	12	0,72
106 225 00	25	134,0	126,66	12	0,78
106 226 00	26	139,0	131,70	16	0,87
106 227 00	27	144,0	136,75	16	0,95
106 228 00	28	148,7	141,78	16	1,01
106 229 00	29	153,8	146,83	16	1,13
106 230 00	30	158,8	151,87	16	1,15
106 232 00	32	168,9	161,95	16	1,32
106 234 00	34	179,0	172,05	16	1,53
106 235 00	35	184,1	177,10	16	1,61
106 236 00	36	189,1	182,15	20	1,70
106 238 00	38	199,2	192,24	20	1,87
106 240 00	40	209,3	202,34	20	2,13
106 242 00	42	219,9	212,44	20	2,36
106 244 00	44	230,0	222,53	20	2,57
106 245 00	45	235,0	227,58	20	2,68
106 246 00	46	240,1	232,63	20	2,78
106 248 00	48	250,2	242,73	20	3,01
106 250 00	50	260,3	252,82	20	3,38
106 254 00	54	280,5	273,03	20	3,96
106 257 00	57	296,0	288,18	25	4,34
106 260 00	60	310,8	303,32	25	4,90
106 265 00	65	336,5	328,58	25	5,83
106 270 00	70	361,8	353,84	25	6,76
106 272 00	72	371,9	363,95	25	7,11
106 276 00	76	392,1	384,16	25	7,77
106 280 00	80	412,3	404,35	25	9,03
106 283 00	95	488,5	480,14	30	12,53
106 288 00	114	584,1	576,13	30	21,00

Sprockets made from stainless steel page 63.
Sprockets ready-to-mount page 68.
Sprockets for Taper clamping bushes page 74.

Sprockets KRS with One-Sided Hub, ISO 12 B-1

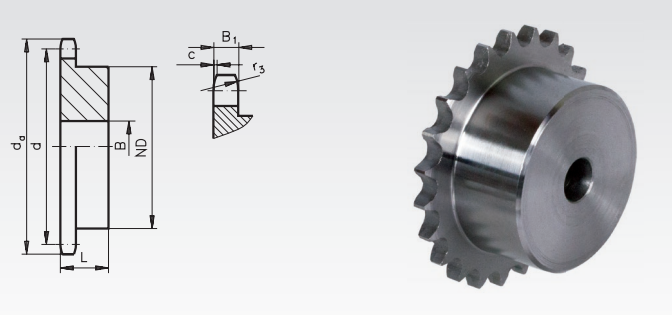

Material: Steel C45, not hardened.
Pre-bored.
Sprockets marked with * are made from grey cast iron GG22.

Ordering Details: e.g.: Product No. 107 108 00, KRS, 3/4 x 7/16", 8 Teeth

Pitch 3/4 x 7/16" KRS
B_1 = 11.1 mm, c = 2.0 mm, r_3 = 19 mm

Product No.	Number of teeth	d_a mm	d mm	ND mm	B mm	L mm	Weight kg
107 108 00	8	57,6	49,78	31	12	30	0,22
107 109 00	9	62,0	55,70	37	12	30	0,30
107 110 00	10	69,0	61,64	42	12	30	0,39
107 111 00	11	75,0	67,61	46	16	35	0,53
107 112 00	12	81,5	73,61	52	16	35	0,67
107 113 00	13	87,5	79,59	58	16	35	0,83
107 114 00	14	93,6	85,61	64	16	35	1,00
107 115 00	15	99,8	91,63	70	16	35	1,18
107 116 00	16	105,5	97,65	75	16	35	1,35
107 117 00	17	111,5	103,67	80	16	35	1,53
107 118 00	18	118,0	109,71	80	16	35	1,61
107 119 00	19	124,2	115,75	80	16	35	1,72
107 120 00	20	129,7	121,78	80	16	35	1,80
107 121 00	21	136,0	127,82	90	20	40	2,35
107 122 00	22	141,8	133,86	90	20	40	2,47
107 123 00	23	149,0	139,90	90	20	40	2,55
107 124 00	24	153,9	145,94	90	20	40	2,68
107 125 00	25	160,0	152,00	90	20	40	2,78
107 126 00	26	165,9	158,04	95	20	40	3,09
107 127 00	27	172,3	164,09	95	20	40	3,20
107 128 00	28	178,0	170,13	95	20	40	3,35
107 130 00	30	190,5	182,25	95	20	40	3,61
107 132 00	32	203,3	194,35	100	20	40	4,10
107 134 00	34	214,6	206,46	100	20	40	4,45
107 135 00	35	221,0	212,52	100	20	40	4,62
107 136 00	36	226,8	218,58	100	20	40	4,77
107 138 00	38	239,0	230,69	100	20	40	5,00
107 140 00	40	251,3	242,81	100	20	40	5,56
107 145 00*	45	282,5	273,10	100	24	56	5,38
107 157 00*	57	354,0	345,81	100	30	56	7,06
107 176 00*	76	469,9	460,99	100	30	56	9,49
107 183 00*	95	585,1	576,17	100	30	65	15,53
107 188 00*	114	700,6	691,36	100	30	65	23,00

Sprockets marked with * are made from grey cast iron GG22.

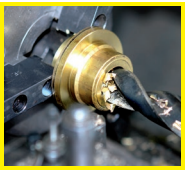

Reworking within 24h-service possible. Custom made parts on request.

Plate wheels KRL, ISO 12 B-1

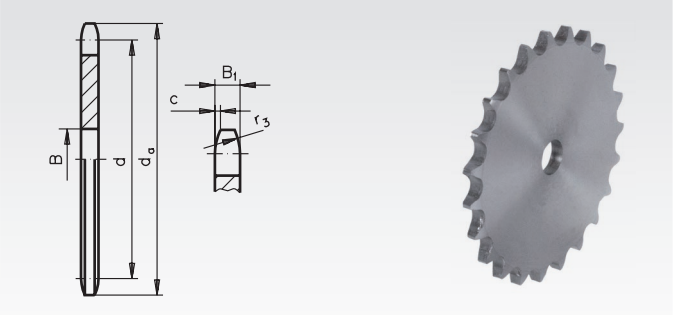

Material: Low-carbon steel, not hardable.
Pre-bored.

Ordering Details: e.g.: Product No. 107 208 00, KRL, 3/4 x 7/16", 8 Teeth

Pitch 3/4 x 7/16" KRL
B_1 = 11.1 mm, c = 2.0 mm, r_3 = 19 mm

Product No.	Number of teeth	d_a mm	d mm	B mm	Weight kg
107 208 00	8	57,6	49,78	12	0,12
107 209 00	9	62,0	55,70	12	0,16
107 210 00	10	69,0	61,64	12	0,20
107 211 00	11	75,0	67,61	14	0,24
107 212 00	12	81,5	73,61	14	0,29
107 213 00	13	87,5	79,59	14	0,35
107 214 00	14	93,6	85,61	14	0,40
107 215 00	15	99,8	91,63	14	0,48
107 216 00	16	105,5	97,65	14	0,55
107 217 00	17	111,5	103,67	14	0,64
107 218 00	18	118,0	109,71	14	0,70
107 219 00	19	124,2	115,75	14	0,79
107 220 00	20	129,7	121,78	14	0,89
107 221 00	21	136,0	127,82	16	0,98
107 222 00	22	141,8	133,86	16	1,07
107 223 00	23	149,0	139,90	16	1,18
107 224 00	24	153,9	145,94	16	1,32
107 225 00	25	160,0	152,00	16	1,43
107 226 00	26	165,9	158,04	16	1,54
107 227 00	27	172,3	164,09	16	1,67
107 228 00	28	178,0	170,13	16	1,76
107 229 00	29	184,1	176,19	16	1,93
107 230 00	30	190,5	182,25	16	2,10
107 232 00	32	203,3	194,36	20	2,37
107 234 00	34	214,6	206,46	20	2,49
107 235 00	35	221,0	212,52	20	2,79
107 236 00	36	226,8	218,58	20	3,03
107 238 00	38	239,0	230,69	20	3,39
107 240 00	40	251,3	242,81	20	3,72
107 242 00	42	264,5	254,93	25	4,10
107 244 00	44	276,5	267,04	25	4,68
107 245 00	45	282,5	273,10	25	4,81
107 246 00	46	287,9	279,16	25	4,86
107 248 00	48	300,1	291,27	25	5,37
107 250 00	50	312,3	303,39	25	5,95
107 254 00	54	336,6	327,64	25	7,00
107 257 00	57	355,4	345,81	25	7,76
107 260 00	60	373,0	363,99	25	8,37
107 265 00	65	403,2	394,29	25	10,13
107 270 00	70	433,6	424,60	30	11,84
107 272 00	72	447,0	436,74	30	12,67
107 276 00	76	469,9	460,99	30	14,14
107 280 00	80	494,2	485,22	30	14,79
107 283 00	95	585,1	576,17	30	25,00

Sprockets made from stainless steel page 63.
Sprockets ready-to-mount page 70.
Sprockets for Taper clamping bushes page 74.

Sprockets KRS with One-Sided Hub, ISO 16 B-1

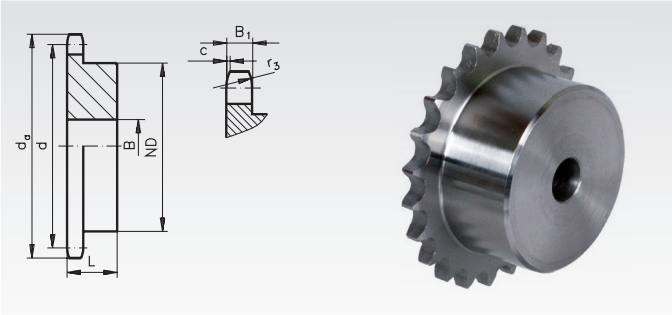

Material: Steel C45, not hardened.
Pre-bored.
Sprockets marked with * are made from grey cast iron GG22.

Ordering Details: e.g.: Product No. 108 108 00, KRS, 1" x 17.02, 8 Teeth

Pitch 1" x 17.02 mm KRS
B_1 = 16.2 mm, c = 2.5 mm, r_3 = 26 mm

Product No.	Number of teeth	d_a mm	d mm	ND mm	B mm	L mm	Weight kg
108 108 00	8	77,0	66,37	42	16	35	0,50
108 109 00	9	85,0	74,37	50	16	35	0,69
108 110 00	10	93,0	82,19	55	16	35	0,87
108 111 00	11	99,5	90,14	61	16	40	1,18
108 112 00	12	109,0	98,14	69	16	40	1,46
108 113 00	13	117,0	106,12	78	16	40	1,81
108 114 00	14	125,0	114,15	84	16	40	2,10
108 115 00	15	133,0	122,17	92	16	40	2,49
108 116 00	16	141,0	130,20	100	20	45	3,19
108 117 00	17	149,0	138,22	100	20	45	3,36
108 118 00	18	157,0	146,28	100	20	45	3,61
108 119 00	19	165,2	154,33	100	20	45	3,82
108 120 00	20	173,2	162,38	100	20	45	4,07
108 121 00	21	181,2	170,43	110	20	50	5,03
108 122 00	22	189,3	178,48	110	20	50	5,36
108 123 00	23	197,5	186,53	110	20	50	5,59
108 124 00	24	205,5	194,59	110	20	50	5,92
108 125 00	25	213,5	202,66	110	20	50	6,21
108 126 00	26	221,6	210,72	120	20	50	7,02
108 127 00	27	229,6	218,79	120	20	50	7,27
108 128 00	28	237,7	226,85	120	20	50	7,68
108 130 00	30	254,0	243,00	120	20	50	8,42
108 132 00	32	270,0	259,13	120	25	50	9,25
108 134 00	34	287,0	275,28	120	25	50	9,93
108 135 00	35	296,2	283,36	120	25	50	10,47
108 136 00	36	304,6	291,44	120	25	50	10,95
108 138 00	38	320,7	307,59	120	25	50	11,71
108 145 00*	45	377,0	364,13	125	30	70	10,91
108 157 00*	57	474,0	461,08	125	35	70	13,79
108 176 00*	76	627,0	614,65	140	35	80	26,50
108 183 00*	95	781,0	768,22	140	40	80	35,00
108 188 00*	114	933,0	921,81	140	40	80	43,50

Sprockets marked with * are made from grey cast iron GG22.

Sprockets made from stainless steel page 63.
Sprockets ready-to-mount page 72.
Sprockets for Taper clamping bushes page 75.

Plate wheels KRL, ISO 16 B-1

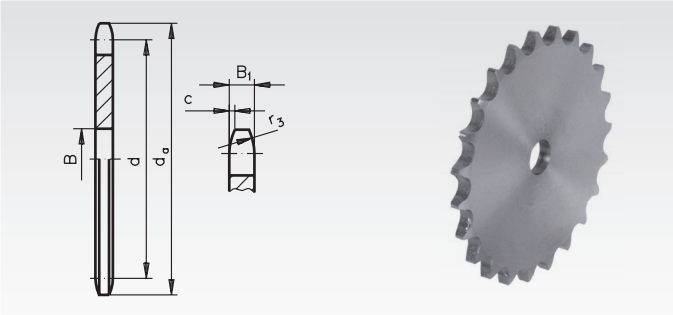

Material: Low-carbon steel, not hardable.
Pre-bored.

Ordering Details: e.g.: Product No. 108 208 00, KRL, 1" x 17.02, 8 Teeth

Pitch 1" x 17.02 mm KRL
B_1 = 16.2 mm, c = 2.5 mm, r_3 = 26 mm

Product No.	Number of teeth	d_a mm	d mm	B mm	Weight kg
108 208 00	8	77,0	66,37	16	0,31
108 209 00	9	85,0	74,27	16	0,38
108 210 00	10	93,0	82,19	16	0,53
108 211 00	11	99,5	90,14	16	0,62
108 212 00	12	109,0	98,14	16	0,78
108 213 00	13	117,0	106,12	16	0,94
108 214 00	14	125,0	114,15	16	1,09
108 215 00	15	133,0	122,17	16	1,26
108 216 00	16	141,0	130,20	20	1,41
108 217 00	17	149,0	138,22	20	1,62
108 218 00	18	157,0	146,28	20	1,85
108 219 00	19	165,2	154,33	20	2,04
108 220 00	20	173,0	162,38	20	2,30
108 221 00	21	181,2	170,43	20	2,59
108 222 00	22	189,3	178,48	20	2,84
108 223 00	23	197,5	186,53	20	3,12
108 224 00	24	205,5	194,59	20	3,37
108 225 00	25	213,5	202,66	20	3,92
108 226 00	26	221,6	210,72	20	4,13
108 227 00	27	229,6	218,79	20	4,34
108 228 00	28	237,7	226,85	20	4,67
108 230 00	30	254,0	243,00	20	5,43
108 232 00	32	270,0	259,13	25	6,35
108 234 00	34	287,0	275,28	25	6,97
108 235 00	35	296,2	283,36	25	7,39
108 236 00	36	304,6	291,44	25	7,75
108 238 00	38	320,7	307,59	25	8,68
108 240 00	40	336,9	323,75	25	9,88
108 244 00	44	369,1	356,06	25	12,00
108 245 00	45	377,1	364,13	25	12,40
108 248 00	48	401,3	388,36	25	14,00
108 250 00	50	417,4	404,52	25	15,60
108 254 00	54	448,3	436,85	30	18,00
108 257 00	57	474,0	461,07	30	20,00
108 260 00	60	498,3	485,32	30	22,00
108 270 00	70	579,2	566,14	30	31,00
108 276 00	76	627,0	614,65	30	35,00
108 280 00	80	660,0	646,96	30	40,50
108 283 00	95	781,1	768,22	30	56,00
108 288 00	114	934,3	921,81	30	80,00

Reworking within 24h-service possible. Custom made parts on request.

Sprockets KRS with One-Sided Hub, ISO 20 B-1

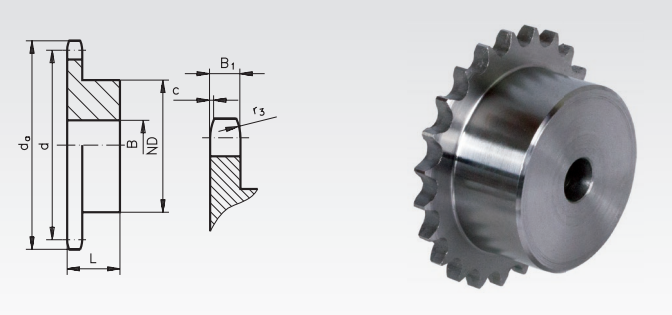

Material: Steel C45, not hardened.
Pre-bored.
Sprockets marked with * are made from grey cast iron.
Sprockets marked with 1) made from St52 with welded in hub.

Ordering Details: e.g.: Product No. 109 108 00, KRS, 1 1/4 x 3/4", 8 Teeth

Pitch 1 1/4 x 3/4", KRS
B_1 = 18.5 mm, c = 3.5 mm, r_3 = 32 mm

Product No.	Number of teeth	d_a mm	d mm	ND mm	B mm	L mm	Weight kg
109 108 00	8	98,1	82,96	53	20	40	0,90
109 109 00	9	108,0	92,84	63	20	40	1,30
109 110 00	10	117,9	102,74	70	20	40	1,60
109 111 00	11	127,8	112,68	77	20	45	2,10
109 112 00	12	137,8	122,68	88	20	45	2,70
109 113 00	13	147,8	132,65	98	20	45	3,30
109 114 00	14	157,8	142,68	108	20	45	3,90
109 115 00	15	167,9	152,72	118	20	45	4,60
109 116 00	16	177,9	162,75	120	25	50	5,35
109 117 00	17	187,9	172,78	120	25	50	5,75
109 118 00	18	198,0	182,85	120	25	50	6,10
109 119 00	19	208,1	192,91	120	25	50	6,60
109 120 00	20	218,1	202,98	120	25	50	7,00
109 121 00	21	228,2	213,04	140	25	55	9,10
109 123 00	23	248,3	233,17	140	25	55	10,00
109 125 00	25	268,5	253,33	140	25	55	11,00
109 127 00	27	288,6	273,49	150	30	55	13,00
109 130 00	30	318,9	303,75	150	30	55	15,45
109 135 00	35 1)	369,4	354,20	150	30	55	19,50
109 138 00*	38	399,6	384,49	125	35	70	11,90
109 145 00*	45	470,3	455,17	125	35	70	13,80
109 157 00*	57	591,5	576,36	135	40	80	24,00
109 176 00*	76	783,5	768,32	140	50	90	37,50

Plate wheels KRL, ISO 20 B-1

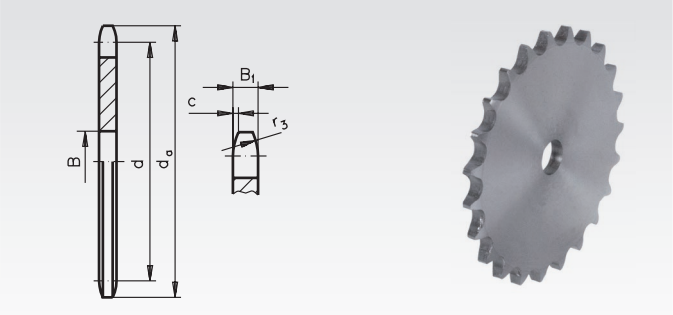

Material: Low-carbon steel, not hardable.
Pre-bored.

Ordering Details: e.g.: Product No. 109 208 00, KRL, 1 1/4 x 3/4", 8 Teeth

Pitch 1 1/4 x 3/4", KRL
B_1 = 18.5 mm, c = 3.5 mm, r_3 = 32 mm

Product No.	Number of teeth	d_a mm	d mm	B mm	Weight kg
109 208 00	8	98,1	82,96	16	0,65
109 209 00	9	108,0	92,84	16	0,80
109 210 00	10	117,9	102,74	16	1,00
109 211 00	11	127,8	112,68	20	1,20
109 212 00	12	137,8	122,68	20	1,45
109 213 00	13	147,8	132,65	20	1,70
109 214 00	14	157,8	142,68	20	2,00
109 215 00	15	167,9	152,72	20	2,40
109 216 00	16	177,9	162,75	20	2,60
109 217 00	17	187,9	172,78	20	3,00
109 218 00	18	198,0	182,85	20	3,30
109 219 00	19	208,1	192,91	20	3,75
109 220 00	20	218,1	202,98	20	4,20
109 221 00	21	228,2	213,04	25	4,60
109 222 00	22	238,3	223,11	25	5,00
109 223 00	23	248,3	233,17	25	5,55
109 224 00	24	258,4	243,23	25	6,25
109 225 00	25	268,5	253,33	25	6,60
109 227 00	27	288,6	273,40	30	7,80
109 230 00	30	318,9	303,75	30	9,80
109 235 00	35	369,4	354,20	30	13,40
109 238 00	38	399,6	384,49	30	15,80
109 240 00	40	419,8	404,68	30	18,00
109 245 00	45	470,3	455,17	30	22,50
109 248 00	48	500,6	485,46	30	26,00
109 254 00	54	561,2	546,07	30	32,00
109 257 00	57	591,5	576,36	30	35,00

Sprockets marked with * are made from grey cast iron GG22.

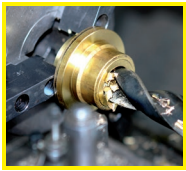

Reworking within 24h-service possible. Custom made parts on request.

Sprockets KRS with One-Sided Hub, ISO 24 B-1

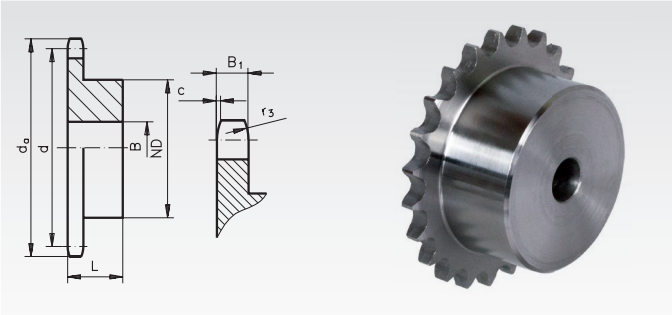

Material: Steel C45, not hardened.
Pre-bored.
Sprockets marked with * are made from grey cast iron GG22.
Sprockets marked with 1) with welded in hub.

Ordering Details: e.g.: Product No. 110 110 00, KRS, 1 1/2 x 1“, 10 Teeth

Pitch 1 1/2 x 1“, KRS
B_1 = 24.1 mm, c = 4.0 mm, r_3 = 38 mm

Product No.	Number of teeth	d_a mm	d mm	ND mm	B mm	L mm	Weight kg
110 110 00	10	138,0	123,29	80	20	45	2,55
110 111 00	11	150,0	135,21	90	25	50	3,40
110 112 00	12	162,0	147,22	102	25	50	4,20
110 113 00	13	174,2	159,18	114	25	50	5,20
110 114 00	14	186,2	171,22	128	25	50	6,20
110 115 00	15	198,2	183,26	132	25	50	7,30
110 116 00	16	210,3	195,30	136	25	55	8,90
110 117 00	17	222,3	207,34	136	25	55	9,50
110 118 00	18	234,3	219,42	136	25	55	10,30
110 119 00	19	246,5	231,49	136	25	55	10,90
110 120 00	20	258,6	243,57	136	25	55	11,80
110 121 00	21	270,6	255,65	150	30	60	13,70
110 123 00	23	294,8	279,80	150	30	60	15,40
110 125 00	25	319,0	304,00	150	30	60	17,50
110 128 00	28[1)]	355,2	340,27	150	30	60	21,50
110 130 00	30[1)]	379,5	364,50	150	30	60	24,00
110 138 00	38[1)]	476,2	461,39	150	30	60	35,00
110 145 00*	45	561,2	546,20	140	45	90	26,50
110 157 00*	57	706,5	691,63	160	45	100	39,50

Plate wheels KRL, ISO 24 B-1

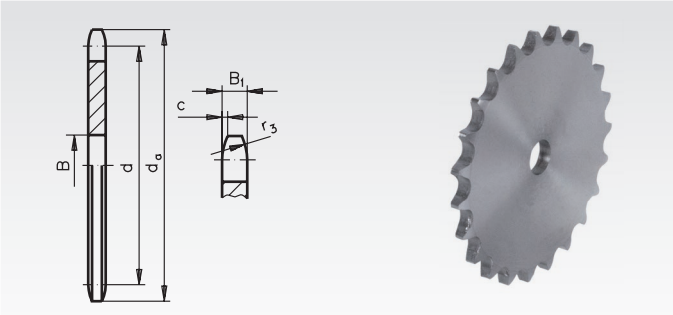

Material: Low-carbon steel, not hardable.
Pre-bored.

Ordering Details: e.g.: Product No. 110 210 00, KRL, 1 1/2 x 1“, 10 Teeth

Pitch 1 1/2 x 1“, KRL
B_1 = 24.1 mm, c = 4.0 mm, r_3 = 38 mm

Product No.	Number of teeth	d_a mm	d mm	B mm	Weight kg
110 210 00	10	138,0	123,29	20	1,80
110 211 00	11	150,0	135,21	25	2,20
110 212 00	12	162,0	147,22	25	2,60
110 213 00	13	174,2	159,18	25	3,10
110 214 00	14	186,2	171,22	25	3,60
110 215 00	15	198,2	183,26	25	4,30
110 216 00	16	210,3	195,30	25	4,90
110 218 00	18	234,3	219,42	25	6,30
110 220 00	20	258,6	243,57	25	7,80
110 222 00	22	282,7	267,73	30	9,50
110 224 00	24	306,8	291,88	30	11,30
110 228 00	28	355,2	340,27	30	15,60
110 230 00	30	379,5	364,50	30	18,00
110 235 00	35	440,0	425,04	30	26,00
110 238 00	38	476,2	461,39	30	30,80
110 245 00	45	561,2	546,20	30	42,00
110 248 00	48	597,4	582,55	30	48,00
110 254 00	54	670,2	655,28	30	60,50
110 257 00	57	706,5	691,63	30	66,80

Sprockets marked with * are made from grey cast iron GG22.

Reworking within 24h-service possible. Custom made parts on request.

Double-Sprockets ZRE for two Single-Strand Roller Chains DIN ISO 606 (ex DIN 8187)

Material: Steel C45, not hardened.
Teeth milled, pre-bored.

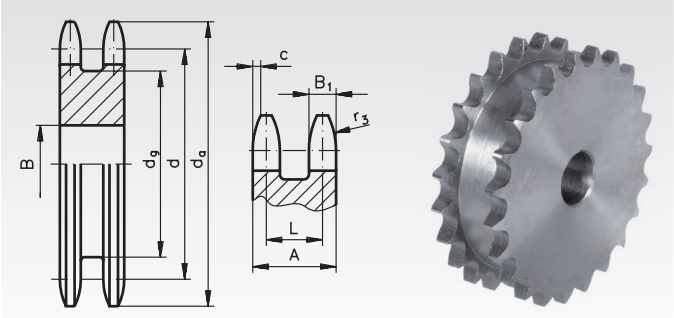

Ordering Details: e.g.: Product No. 121 413 00,
Double Sprocket 13 Teeth, Pitch 3/8 x 7/32"

Pitch 3/8 x 7/32" ZRE, 2 x ISO 06 B-1, B_1 = max. 5.3 mm, B_2 = 15.4, c = 1.0 mm, r_3 = 10 mm

Product No.	Number of teeth	d_a mm	d mm	B mm	d_g mm	A mm	L mm	Weight kg
121 413 00	13	43,5	39,80	10	29	23	17,8	0,14
121 414 00	14	46,5	42,80	10	32	23	17,8	0,17
121 415 00	15	49,5	45,81	10	35	23	17,8	0,20
121 416 00	16	52,5	48,82	12	38	23	17,8	0,23
121 417 00	17	55,5	51,83	12	41	23	17,8	0,26
121 418 00	18	58,6	54,85	12	44	23	17,8	0,30
121 419 00	19	61,6	57,87	12	47	23	17,8	0,34
121 420 00	20	64,6	60,89	15	50	23	17,8	0,38
121 421 00	21	67,6	63,91	15	53	23	17,8	0,43
121 423 00	23	73,7	69,95	15	60	23	17,8	0,54
121 425 00	25	79,7	76,00	15	66	23	17,8	0,65

Pitch 1/2 x 5/16" ZRE, 2 x ISO 08 B-1, B_1 = max. 7.2 mm, B_2 = 21, c = 1.3 mm, r_3 = 13 mm

Product No.	Number of teeth	d_a mm	d mm	B mm	d_g mm	A mm	L mm	Weight kg
125 412 00	12	53,9	49,07	15	36	30	23	0,27
125 413 00	13	57,9	53,06	15	40	30	23	0,33
125 414 00	14	61,9	57,07	15	44	30	23	0,40
125 415 00	15	65,9	61,09	15	48	30	23	0,47
125 416 00	16	69,9	65,10	15	52	30	23	0,55
125 417 00	17	74,0	69,11	15	56	30	23	0,64
125 418 00	18	78,0	73,14	15	60	30	23	0,73
125 419 00	19	82,0	77,16	15	64	30	23	0,84
125 420 00	20	86,0	81,19	15	68	30	23	0,93
125 421 00	21	90,1	85,22	15	72	30	23	1,03
125 423 00	23	98,1	93,27	15	80	30	23	1,28
125 425 00	25	106,2	101,33	15	88	30	23	1,54

Pitch 5/8 x 3/8" ZRE, 2 x ISO 10 B-1, B_1 = max. 9.1 mm, B_2 = 25.5, c = 1.6 mm, r_3 = 16 mm

Product No.	Number of teeth	d_a mm	d mm	B mm	d_g mm	A mm	L mm	Weight kg
126 412 00	12	68,2	61,34	15	45	34	25,2	0,51
126 413 00	13	73,2	66,32	15	50	34	25,2	0,62
126 414 00	14	78,2	71,34	15	55	34	25,2	0,74
126 415 00	15	83,2	76,36	15	60	34	25,2	0,87
126 416 00	16	88,3	81,37	15	65	34	25,2	1,02
126 417 00	17	93,3	86,39	15	70	34	25,2	1,17
126 418 00	18	98,3	91,42	15	75	34	25,2	1,34
126 419 00	19	103,3	96,45	20	80	34	25,2	1,49
126 420 00	20	108,4	101,49	20	85	34	25,2	1,68
126 421 00	21	113,4	106,52	20	90	34	25,2	1,88
126 423 00	23	123,5	116,58	20	100	34	25,2	2,30
126 425 00	25	133,6	126,66	20	110	34	25,2	2,77

Pitch 3/4 x 7/16" ZRE, 2 x ISO 12 B-1, B_1 = max. 11.1 mm, B_2 = 30.3, c = 2.0 mm, r_3 = 19 mm

Product No.	Number of teeth	d_a mm	d mm	B mm	d_g mm	A mm	L mm	Weight kg
127 412 00	12	81,8	73,60	20	53	44	33,4	0,91
127 413 00	13	87,8	79,59	20	59	44	33,4	1,12
127 414 00	14	93,8	85,61	20	65	44	33,4	1,33
127 415 00	15	99,8	91,63	20	71	44	33,4	1,57
127 416 00	16	105,8	97,65	20	77	44	33,3	1,84
127 417 00	17	111,9	103,67	20	83	44	33,4	2,12
127 418 00	18	117,9	109,71	20	89	44	33,4	2,42
127 419 00	19	123,9	115,75	20	95	44	33,4	2,75
127 420 00	20	130,0	121,78	20	101	44	33,4	3,09
127 421 00	21	136,0	127,82	25	107	44	33,4	3,42
127 423 00	23	148,1	139,90	25	119	44	33,4	4,21
127 425 00	25	160,2	152,00	25	131	44	33,4	5,07

Pitch 1" x 17.02 mm, ZRE, 2 x ISO 16 B-1, B_1 = max. 16.2 mm, B_2 = 47.7, c = 2.5 mm, r_3 = 26 mm

Product No.	Number of teeth	d_a mm	d mm	B mm	d_g mm	A mm	L mm	Weight kg
128 412 00	12	109,7	98,14	20	72	68	52,5	2,58
128 413 00	13	117,7	106,12	20	80	68	52,5	3,14
128 414 00	14	125,7	114,15	20	88	68	52,5	3,76
128 415 00	15	133,7	122,17	20	96	68	52,5	4,44
128 416 00	16	141,8	130,20	25	104	68	52,5	5,09
128 417 00	17	149,8	138,22	25	112	68	52,5	5,87
128 418 00	18	157,8	146,28	25	120	68	52,5	6,70
128 419 00	19	165,9	154,33	30	128	68	52,5	7,53
128 421 00	21	182,0	170,43	30	144	68	52,5	9,48

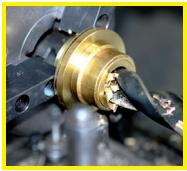

Reworking within 24h-service possible. Custom made parts on request.

Double Sprockets ZRT for Taper Bushes

Material: Steel C45, not hardened.
Sprockets marked with * are made from grey cast iron GG22.

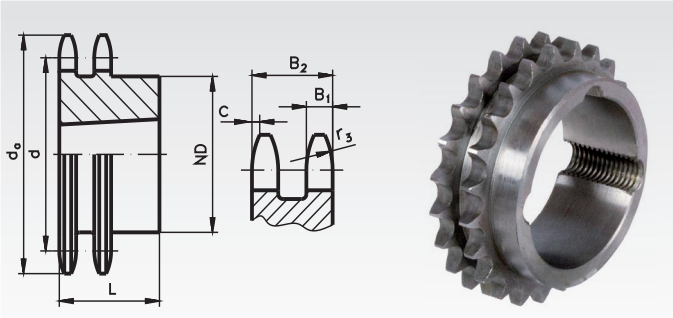

Ordering Details: e.g.: Product No. 121 771 17, ZRT, Pitch 3/8 x 7/32", 17 Teeth, Dimension bore with Reference to Taper Bush Type, see page 76.

Pitch 3/8 x 7/32" ZRT, ISO 06 B-2, B_1 = 5.3 mm, B_2 = 15.4, c = 1.0 mm, r_3 = 10 mm

Product No.	Number of teeth	d_a mm	d mm	ND mm	L mm	Weight kg	Taper Bush Type Page 76
121 771 17	17	55,3	51,83	41	22	0,11	1008
121 771 18	18	58,3	54,85	43	22	0,15	1008
121 771 19	19	61,3	57,87	46	22	0,18	1008
121 771 20	20	64,3	60,89	48	22	0,22	1008
121 771 21	21	68,0	63,91	49	22	0,16	1008
121 771 22	22	71,0	66,93	52	22	0,28	1108
121 771 23	23	73,5	69,95	59	25	0,27	1210
121 771 24	24	77,0	72,97	61	25	0,32	1210
121 771 25	25	80,0	76,00	64	25	0,37	1210
121 771 26	26	83,0	79,02	65	25	0,44	1210
121 771 27	27	86,0	82,05	70	25	0,50	1210
121 771 28	28	89,0	85,07	70	25	0,57	1210
121 771 30	30	94,7	91,12	75	25	0,68	1210
121 771 38	38	119,5	115,35	80	25	1,03	1610
121 771 57*	57	176,9	172,91	90	25	1,16	1610

Pitch 1/2 x 5/16" ZRT, ISO 08 B-2, B_1 = 7.2 mm, B_2 = 21, c = 1.3 mm, r_3 = 13 mm

Product No.	Number of teeth	d_a mm	d mm	ND mm	L mm	Weight kg	Taper Bush Type Page 76
125 771 15	15	65,0	61,09	46	22	0,22	1008
125 771 16	16	69,5	65,10	50	22	0,22	1108
125 771 17	17	73,6	69,11	56	25	0,23	1210
125 771 18	18	77,8	73,14	60	25	0,30	1210
125 771 19	19	81,7	77,16	62	25	0,38	1210
125 771 20	20	85,8	81,19	66	25	0,45	1610
125 771 21	21	89,7	85,22	70	25	0,50	1610
125 771 22	22	93,8	89,24	76	25	0,55	1610
125 771 23	23	98,2	93,27	79	25	0,62	1610
125 771 24	24	101,8	97,29	84	25	0,68	1610
125 771 25	25	105,8	101,33	87	32	0,72	2012
125 771 26	26	110,0	105,36	87	32	0,82	2012
125 771 27	27	114,0	109,40	87	32	0,92	2012
125 771 28	28	118,0	113,42	87	32	1,10	2012
125 771 30	30	126,1	121,50	87	32	1,24	2012
125 771 38	38	158,6	153,80	100	32	2,50	2012
125 771 57*	57	236,4	230,54	111	32	3,64	2012

Pitch 5/8 x 3/8" ZRT, ISO 10 B-2, B_1 = 9.1 mm, B_2 = 25.5, c = 1.6 mm, r_3 = 16 mm

Product No.	Number of teeth	d_a mm	d mm	ND[1)] mm	L mm	Weight kg	Taper Bush Type Page 76
126 771 15	15	83,0	76,36	-	25,5	0,38	1210
126 771 16	16	88,0	81,37	-	25,5	0,42	1610
126 771 17	17	93,0	86,39	-	25,5	0,47	1610
126 771 18	18	98,3	91,42	-	25,5	0,60	1610
126 771 19	19	103,3	96,45	-	25,5	0,72	1610
126 771 20	20	108,4	101,49	-	25,5	0,87	1610
126 771 21	21	113,4	106,52	-	25,5	1,01	1610
126 771 22	22	118,0	111,55	-	25,5	1,18	1610
126 771 23	23	123,4	116,58	-	25,5	1,35	1610
126 771 24	24	128,3	121,62	90	32	1,45	2012
126 771 25	25	134,0	126,66	90	32	1,55	2012
126 771 27	27	144,0	136,75	90	32	1,98	2012
126 771 30	30	158,8	151,87	90	32	2,63	2012

[1)] Up to 23 teeth without hub.

Pitch 3/4 x 7/16" ZRT, ISO 12 B-2, B_1 = 11.1 mm, B_2 = 30.3, c = 2.0 mm, r_3 = 19 mm

Product No.	Number of teeth	d_a mm	d mm	ND[1)] mm	L mm	Weight kg	Taper Bush Type Page 76
127 771 15	15	99,8	91,63	-	30,3	0,68	1610
127 771 16	16	105,5	97,65	-	30,3	0,89	1610
127 771 17	17	111,5	103,67	-	30,3	1,14	1610
127 771 18	18	118,0	109,71	90	32	1,18	2012
127 771 19	19	124,2	115,75	90	32	1,24	2012
127 771 20	20	129,7	121,78	108	45	1,40	2517
127 771 21	21	136,0	127,82	108	45	1,68	2517
127 771 22	22	141,8	133,86	108	45	1,99	2517
127 771 23	23	149,0	139,90	108	45	2,24	2517
127 771 24	24	153,9	145,94	108	45	2,54	2517
127 771 25	25	160,0	152,00	108	45	2,87	2517
127 771 26	26	165,9	158,04	108	45	3,17	2517
127 771 27	27	172,3	164,09	108	45	3,55	2517
127 771 30	30	190,5	182,24	108	45	4,62	2517
127 771 38	38	239,0	230,69	140	51	8,11	3020
127 771 57*	57	354,0	345,81	160	51	10,28	3020

[1)] Up to 17 teeth without hub.

Double Sprockets ZRT for Taper Bushes

Material: Steel C45, not hardened.
Sprockets marked with * are made from grey cast iron GG22.

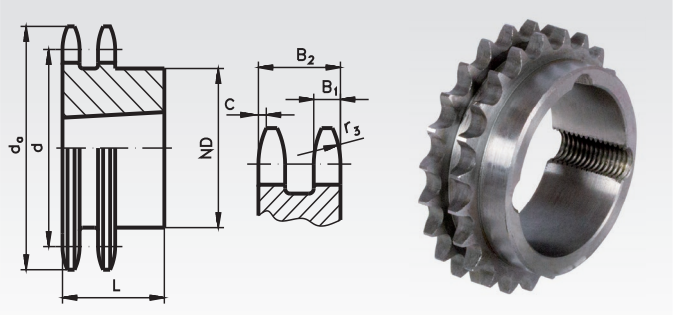

Ordering Details: e.g.: Product No. 128 771 15, ZRT, Pitch 1" x 17.02 mm, 15 Teeth, Dimension bore with Reference to Taper Bush Type, see page 76.

Pitch 1" x 17.02 mm, ZRT, ISO 16 B-2,
B_1 = 16.2 mm, B_2 = 47.7, c = 2.5 mm, r_3 = 26 mm

Product No.	Number of teeth	d_a mm	d mm	ND[1] mm	L mm	Weight kg	Taper Bush Type Page 76
128 771 15	15	133,0	122,17	-	47,7	2,11	2012
128 771 16	16	141,0	130,20	-	47,7	2,25	2517
128 771 17	17	149,0	138,22	-	47,7	2,53	2517
128 771 18	18	157,0	146,28	-	47,7	3,10	2517
128 771 19	19	165,2	154,33	-	47,7	3,80	2517
128 771 20	20	173,2	162,38	-	47,7	4,10	2517
128 771 21	21	181,2	170,43	140	51	4,15	3020
128 771 23	23	197,5	186,53	140	51	5,69	3020
128 771 25	25	213,5	202,66	140	51	6,38	3020
128 771 27	27	229,6	218,79	140	51	9,27	3020
128 771 30	30	254,0	243,00	140	51	13,50	3020
128 771 38*	38	320,7	307,59	160	76	14,94	3030
128 771 57*	57	474,0	461,08	175	89	25,62	3535

[1] Up to 20 teeth without hub.

Assembly Instructions page 824

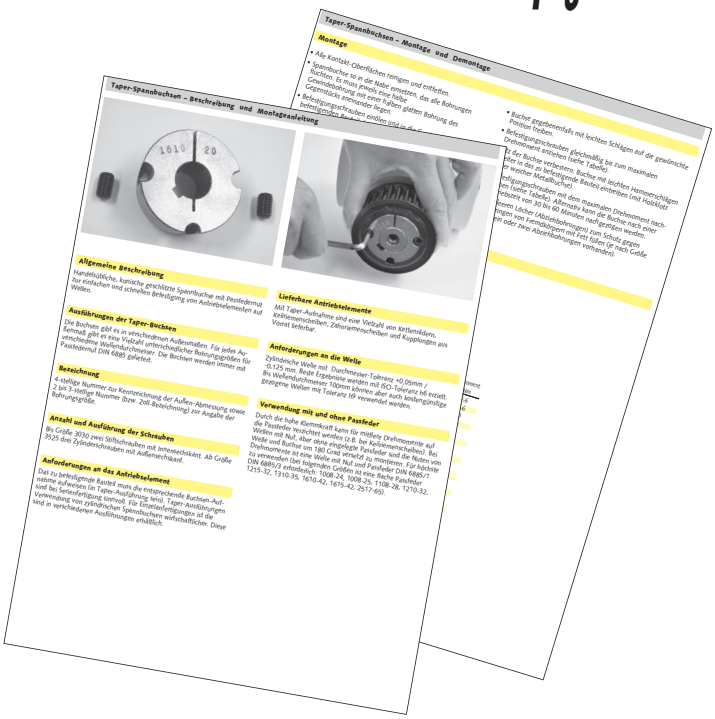

Taper bushes page 76

Double-Strand Sprockets ZRS with Hub, ISO 05 B-2

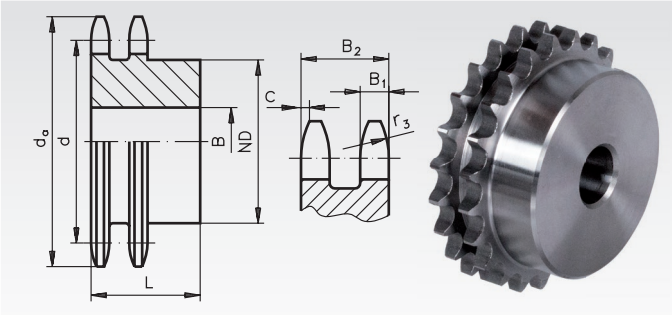

Material: Low-carbon steel, not hardable.
Pre-bored.

Ordering Details: e.g.: Product No. 120 111 00, ZRS, Pitch 8 mm, 11 Teeth

Pitch 8 mm ZRS,
B_1 = 2.7 mm, B_2 = 8.3 mm, c = 1.0 mm, r_3 = 8 mm

Product No.	Number of teeth	d_a mm	d mm	ND mm	B mm	L mm	Weight g
120 111 00	11	31,7	28,39	19	10	18	40
120 112 00	12	34,2	30,91	21	10	18	51
120 113 00	13	36,7	33,42	24	10	18	67
120 114 00	14	39,2	35,95	26	10	18	82
120 115 00	15	41,7	38,48	29	10	18	97
120 116 00	16	44,3	41,01	32	10	20	128
120 117 00	17	46,8	43,53	34	10	20	147
120 118 00	18	49,3	46,07	37	10	20	173
120 119 00	19	51,9	48,61	39	10	20	196
120 120 00	20	54,4	51,14	40	10	20	207
120 121 00	21	57,0	53,68	40	12	20	222
120 122 00	22	59,5	56,21	40	12	20	238
120 123 00	23	62,0	58,75	40	12	20	250
120 124 00	24	64,6	61,29	40	12	20	267
120 125 00	25	67,5	63,83	40	12	20	284
120 126 00	26	69,5	66,37	50	12	22	383
120 127 00	27	72,2	68,91	50	12	22	397
120 128 00	28	74,8	71,45	50	12	22	416
120 130 00	30	79,8	76,53	50	12	22	454
120 132 00	32	84,9	81,61	60	12	22	580
120 135 00	35	92,5	89,25	60	12	22	637
120 138 00	38	100,2	96,88	60	12	22	710
120 140 00	40	105,3	101,97	60	12	22	779

Double-Strand plate wheels ZRL, ISO 05 B-2

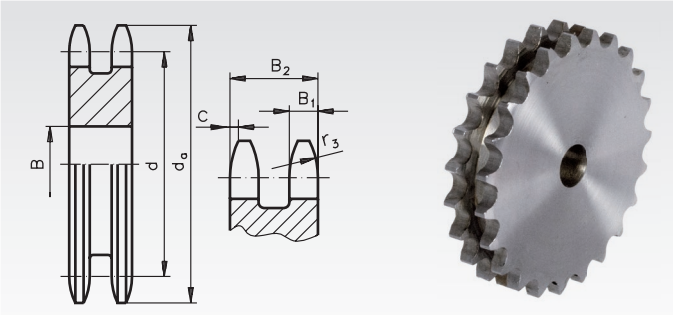

Material: Low-carbon steel, not hardable.
Pre-bored.

Ordering Details: e.g.: Product No. 120 211 00, ZRL, Pitch 8 mm, 11 Teeth

Pitch 8 mm ZRL,
B_1 = 2.7 mm, B_2 = 8.3 mm, c = 1.0 mm, r_3 = 8 mm

Product No.	Number of teeth	d_a mm	d mm	B mm	Weight g
120 211 00	11	31,7	28,39	8	27
120 212 00	12	34,2	30,91	8	31
120 213 00	13	36,7	33,42	8	38
120 214 00	14	39,2	35,95	8	46
120 215 00	15	41,7	38,48	8	53
120 216 00	16	44,3	41,01	10	62
120 218 00	18	49,3	46,07	10	82
120 219 00	19	51,9	48,61	10	93
120 220 00	20	54,4	51,14	10	105
120 221 00	21	57,0	53,68	10	115
120 222 00	22	59,5	56,21	10	128
120 223 00	23	62,0	58,75	10	143
120 224 00	24	64,6	61,29	10	158
120 225 00	25	67,5	63,83	10	167
120 227 00	27	72,2	68,91	12	199
120 228 00	28	74,8	71,45	12	218
120 230 00	30	79,8	76,53	12	254
120 232 00	32	84,9	81,61	12	288
120 235 00	35	92,5	89,25	12	350
120 238 00	38	100,2	96,88	12	424
120 245 00	45	118,0	114,69	14	593
120 257 00	57	148,6	145,22	16	985
120 260 00	60	156,2	152,85	16	1083
120 265 00	65	169,6	165,58	20	1308
120 270 00	70	182,4	178,31	20	1491
120 276 00	76	197,7	193,59	20	1785

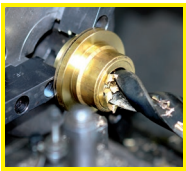

Reworking within 24h-service possible. Custom made parts on request.

Double-Strand Sprockets ZRS with Hub, ISO 06 B-2

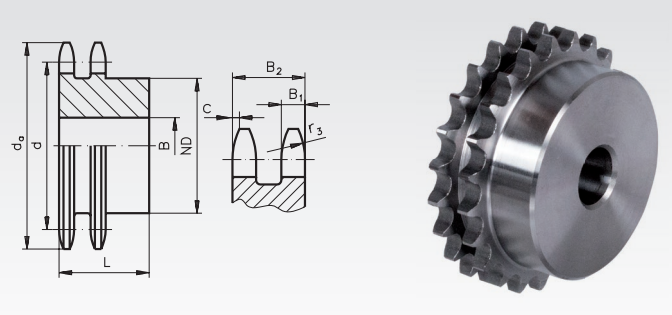

Material: Steel C45, not hardened.
Pre-bored.
Sprockets marked with * are made from grey cast iron GG22.

Ordering Details: e.g.: Product No. 121 111 00, ZRS, 3/8 x 7/32", 11 Teeth

Pitch 3/8 x 7/32" ZRS
B_1 = 5.2 mm, B_2 = 15.4 mm c = 1.0 mm, r_3 = 10 mm

Product No.	Number of teeth	d_a mm	d mm	ND mm	B mm	L mm	Weight g
121 111 00	11	37,0	33,80	22	10	25	87
121 112 00	12	40,0	36,80	25	10	25	110
121 113 00	13	43,0	39,79	28	10	25	141
121 114 00	14	46,3	42,80	31	10	25	170
121 115 00	15	49,3	45,81	34	10	25	202
121 116 00	16	52,3	48,82	37	12	30	268
121 117 00	17	55,3	51,83	40	12	30	315
121 118 00	18	58,3	54,85	43	12	30	363
121 119 00	19	61,3	57,87	46	12	30	409
121 120 00	20	64,3	60,89	49	12	30	473
121 121 00	21	68,0	63,91	52	16	30	533
121 122 00	22	71,0	66,93	55	16	30	597
121 123 00	23	73,5	69,95	58	16	30	662
121 124 00	24	77,0	72,97	61	16	30	733
121 125 00	25	80,0	76,00	64	16	30	804
121 126 00	26	83,0	79,02	67	16	30	878
121 127 00	27	86,0	82,05	70	16	30	956
121 128 00	28	89,0	85,07	73	16	30	1038
121 130 00	30	94,7	91,12	79	16	30	1222
121 132 00	32	101,3	97,17	80	16	30	1312
121 135 00	35	110,4	106,26	80	16	30	1483
121 138 00	38	119,5	115,35	90	16	30	1807
121 140 00	40	125,5	121,40	90	16	30	1926
121 145 00*	45	140,7	136,55	80	20	40	2194
121 157 00*	57	176,9	172,91	80	20	40	2247
121 176 00*	76	234,9	230,49	80	20	40	2760

Double-Strand plate wheels ZRL, ISO 06 B-2

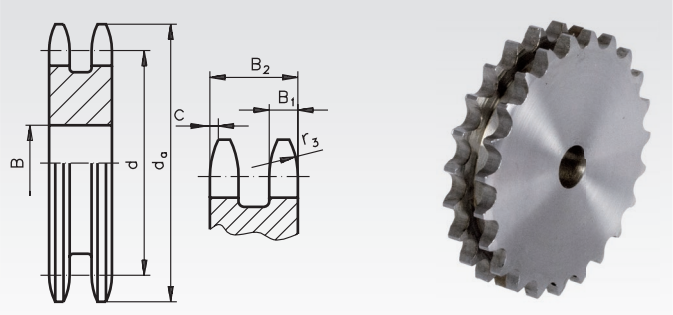

Material: Low-carbon steel, not hardable.
Pre-bored.

Ordering Details: e.g.: Product No. 121 211 00, ZRL, 3/8 x 7/32", 11 Teeth

Pitch 3/8 x 7/32" ZRL
B_1 = 5.2 mm, B_2 = 15.4 mm c = 1.0 mm, r_3 = 10 mm

Product No.	Number of teeth	d_a mm	d mm	B mm	Weight g
121 211 00	11	37,0	33,80	10	63
121 212 00	12	40,0	36,80	10	78
121 213 00	13	43,0	39,79	10	102
121 214 00	14	46,3	42,80	10	118
121 215 00	15	49,3	45,81	10	140
121 216 00	16	52,3	48,82	12	158
121 217 00	17	55,3	51,83	12	187
121 218 00	18	58,3	54,85	12	216
121 219 00	19	61,3	57,87	12	238
121 220 00	20	64,3	60,89	12	273
121 221 00	21	68,0	63,91	12	303
121 223 00	23	73,5	69,95	12	370
121 224 00	24	77,0	72,97	12	408
121 225 00	25	80,0	76,02	12	451
121 226 00	26	83,0	79,02	16	495
121 227 00	27	86,0	82,05	16	514
121 228 00	28	89,0	85,07	16	567
121 230 00	30	94,7	91,12	16	659
121 232 00	32	101,3	97,17	16	773
121 235 00	35	110,4	106,26	16	930
121 238 00	38	119,5	115,35	16	1122
121 240 00	40	125,5	121,40	16	1227
121 245 00	45	140,7	136,55	20	1600
121 248 00	48	149,7	145,64	20	1810
121 254 00	54	167,8	163,82	20	2278
121 257 00	57	176,9	172,91	20	2600
121 276 00	76	234,9	230,49	25	4744
121 283 00	95	292,5	288,08	25	7479
121 288 00	114	349,5	345,68	25	10787

Sprockets marked with * are made from grey cast iron GG22.

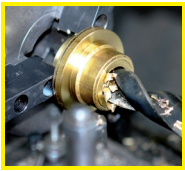

Reworking within 24h-service possible. Custom made parts on request.

Double-Strand Sprockets ZRS with Hub, ISO 08 B-2

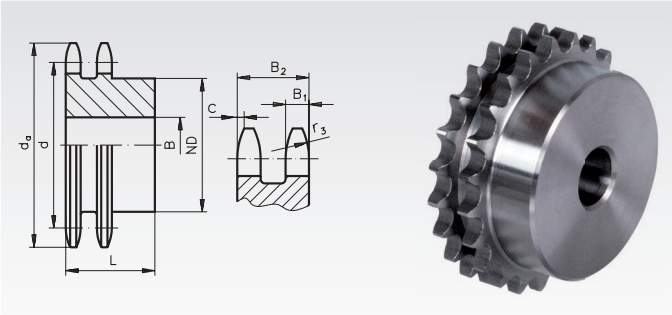

Material: Steel C45, not hardened.
Pre-bored.
Sprockets marked with * are made grey of grey cast iron GG22.

Ordering Details: e.g.: Product No. 125 111 00, ZRS, 1/2 x 5/16", 11 Teeth

Pitch 1/2 x 5/16" ZRS
B_1 = 7 mm, B_2 = 21 mm c = 1.3 mm, r_3 = 13 mm

Product No.	Number of teeth	d_a mm	d mm	ND mm	B mm	L mm	Weight g
125 111 00	11	48,7	45,07	32	12	35	246
125 112 00	12	53,0	49,07	35	12	35	296
125 113 00	13	57,4	53,06	38	12	35	359
125 114 00	14	61,8	57,07	42	12	35	435
125 115 00	15	65,5	61,09	46	12	35	519
125 116 00	16	69,5	65,10	50	16	35	600
125 117 00	17	73,6	69,11	54	16	35	696
125 118 00	18	77,8	73,14	58	16	35	803
125 119 00	19	81,7	77,16	62	16	35	916
125 120 00	20	85,8	81,19	66	16	35	1032
125 121 00	21	89,7	85,22	70	16	40	1280
125 122 00	22	93,8	89,24	70	16	40	1367
125 123 00	23	98,2	93,27	70	16	40	1452
125 124 00	24	101,8	97,29	75	16	40	1638
125 125 00	25	105,8	101,33	80	16	40	1806
125 126 00	26	110,0	105,36	85	20	40	1977
125 127 00	27	114,0	109,40	85	20	40	2075
125 128 00	28	118,0	113,42	90	20	40	2295
125 130 00	30	126,1	121,50	100	20	40	2736
125 132 00	32	134,3	129,56	100	20	40	2986
125 135 00	35	146,7	141,68	100	20	40	3381
125 136 00	36	151,0	145,72	110	20	40	3769
125 138 00	38	158,6	153,80	110	20	40	4066
125 140 00	40	166,8	161,87	110	20	40	4386
125 145 00*	45	188,0	182,07	90	24	50	3322
125 157 00*	57	236,4	230,54	90	24	50	4303
125 176 00*	76	313,3	307,33	100	24	56	6268
125 183 00*	95	390,1	384,11	100	24	56	8247
125 188 00*	114	466,9	460,90	100	24	63	10507

Double-Strand plate wheels ZRL, ISO 08 B-2

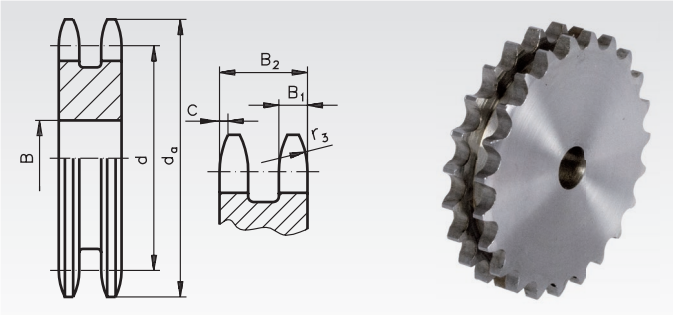

Material: Low-carbon steel, not hardable.
Pre-bored.

Ordering Details: e.g.: Product No. 125 211 00, ZRL, 1/2 x 5/16", 11 Teeth

Pitch 1/2 x 5/16" ZRL
B_1 = 7 mm, B_2 = 21 mm c = 1.3 mm, r_3 = 13 mm

Product No.	Number of teeth	d_a mm	d mm	B mm	Weight g
125 211 00	11	48,7	45,07	10	168
125 212 00	12	53,0	49,07	10	209
125 213 00	13	57,4	53,06	10	255
125 214 00	14	61,8	57,07	10	301
125 215 00	15	65,5	61,09	10	353
125 216 00	16	69,5	65,10	12	400
125 217 00	17	73,6	69,11	12	461
125 218 00	18	77,8	73,14	12	532
125 219 00	19	81,7	77,16	12	598
125 220 00	20	85,8	81,19	12	680
125 221 00	21	89,7	85,22	16	735
125 222 00	22	93,8	89,24	16	823
125 223 00	23	98,2	93,27	16	895
125 224 00	24	101,8	97,23	16	1004
125 225 00	25	105,8	101,33	16	1082
125 226 00	26	110,0	105,36	16	1185
125 227 00	27	114,0	109,40	16	1304
125 228 00	28	118,0	113,42	16	1398
125 230 00	30	126,1	121,50	16	1629
125 232 00	32	134,3	129,56	16	1868
125 235 00	35	146,7	141,68	16	2272
125 236 00	36	151,0	145,72	20	2357
125 238 00	38	158,6	153,80	20	2695
125 240 00	40	166,8	161,87	20	2970
125 245 00	45	188,0	182,07	20	3857
125 248 00	48	200,3	194,18	20	4422
125 254 00	54	224,1	218,43	25	5587
125 257 00	57	236,4	230,54	25	6286
125 276 00	76	313,3	307,33	25	11416
125 283 00	95	390,1	384,11	25	18000
125 288 00	114	466,9	460,90	25	26500

Sprockets marked with * are made from grey cast iron GG22.

Reworking within 24h-service possible. Custom made parts on request.

Double-Strand Sprockets ZRS with Hub, ISO 10 B-2

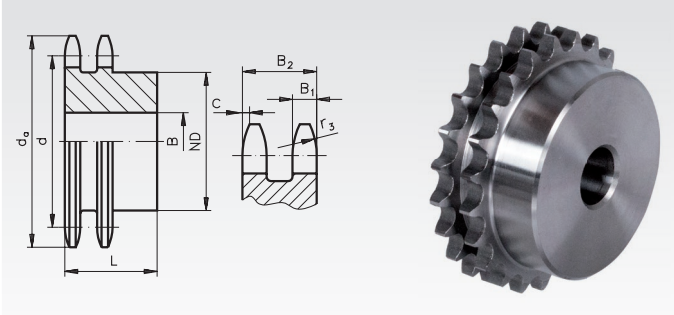

Material: Steel C45, not hardened.
Pre-bored.
Sprockets marked with * are made from grey cast iron GG22.

Ordering Details: e.g.: Product No. 126 111 00, ZRS, 5/8 x 3/8", 11 Teeth

Pitch 5/8 x 3/8" ZRS
B_1 = 9.0 mm, B_2 = 25.5 mm c = 1.6 mm, r_3 = 16 mm

Product No.	Number of teeth	d_a mm	d mm	ND mm	B mm	L mm	Weight kg
126 111 00	11	63,0	56,34	39	16	40	0,45
126 112 00	12	68,0	61,34	44	16	40	0,57
126 113 00	13	73,0	66,32	49	16	40	0,70
126 114 00	14	78,0	71,34	54	16	40	0,84
126 115 00	15	83,0	76,36	59	16	40	0,99
126 116 00	16	88,0	81,37	64	16	45	1,25
126 117 00	17	93,0	86,39	69	16	45	1,47
126 118 00	18	98,3	91,42	74	16	45	1,68
126 119 00	19	103,3	96,45	79	16	45	1,90
126 120 00	20	108,4	101,49	84	16	45	2,14
126 121 00	21	113,4	106,52	85	16	45	2,30
126 122 00	22	118,0	111,55	90	16	45	2,59
126 123 00	23	123,4	116,58	95	16	45	2,87
126 124 00	24	128,3	121,62	100	16	45	3,14
126 125 00	25	134,0	126,66	105	16	45	3,48
126 127 00	27	144,0	136,75	110	20	45	3,94
126 130 00	30	158,8	151,87	120	20	45	4,87
126 132 00	32	168,9	161,95	120	20	45	5,34
126 136 00	36	189,1	182,15	120	20	45	6,38
126 138 00	38	199,2	192,24	120	20	45	6,95
126 145 00*	45	235,0	227,58	100	30	50	5,08
126 157 00*	57	296,0	288,18	100	30	56	6,81
126 176 00*	76	392,1	384,16	100	30	63	8,30
126 183 00*	95	488,5	480,14	110	30	63	12,02
126 188 00*	114	584,1	576,13	125	30	70	16,50

Double-Strand plate wheels ZRL, ISO 10 B-2

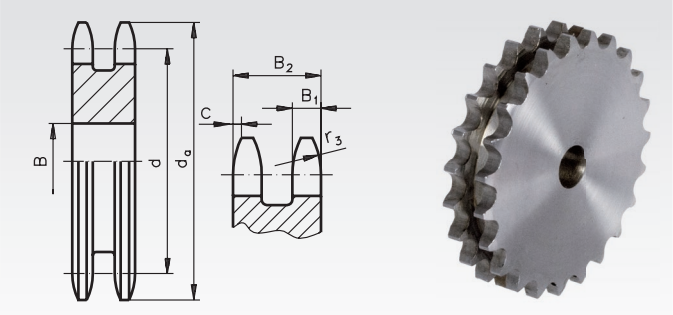

Material: Low-carbon steel, not hardable.
Pre-bored.

Ordering Details: e.g.: Product No. 126 211 00, ZRL, 5/8 x 3/8", 11 Teeth

Pitch 5/8 x 3/8" ZRL
B_1 = 9.0 mm, B_2 = 25.5 mm c = 1.6 mm, r_3 = 16 mm

Product No.	Number of teeth	d_a mm	d mm	B mm	Weight kg
126 211 00	11	63,0	56,34	12	0,34
126 212 00	12	68,0	61,34	12	0,41
126 213 00	13	73,0	66,32	12	0,51
126 214 00	14	78,0	71,34	12	0,59
126 215 00	15	83,0	76,36	12	0,71
126 216 00	16	88,0	81,37	12	0,80
126 217 00	17	93,0	86,38	12	0,93
126 218 00	18	98,3	91,42	12	1,07
126 219 00	19	103,3	96,45	12	1,15
126 220 00	20	108,4	101,49	12	1,33
126 221 00	21	113,4	106,52	16	1,48
126 222 00	22	118,0	111,55	16	1,60
126 224 00	24	128,3	121,62	16	1,99
126 226 00	26	139,0	131,70	20	2,31
126 227 00	27	144,0	136,75	20	2,55
126 228 00	28	148,7	141,78	20	2,77
126 230 00	30	158,8	151,87	20	3,19
126 235 00	35	184,1	177,10	20	4,40
126 238 00	38	199,2	192,24	20	5,28
126 245 00	45	235,0	227,58	25	7,51
126 248 00	48	250,2	242,73	25	8,54
126 257 00	57	296,0	288,18	25	12,23
126 276 00	76	392,1	384,16	25	22,00
126 283 00	95	488,5	480,14	30	34,50
126 288 00	114	584,1	576,13	30	43,43

*

Sprockets marked with * are made from grey cast iron GG22.

Reworking within 24h-service possible. Custom made parts on request.

Double-Strand Sprockets ZRS with Hub, ISO 12 B-2

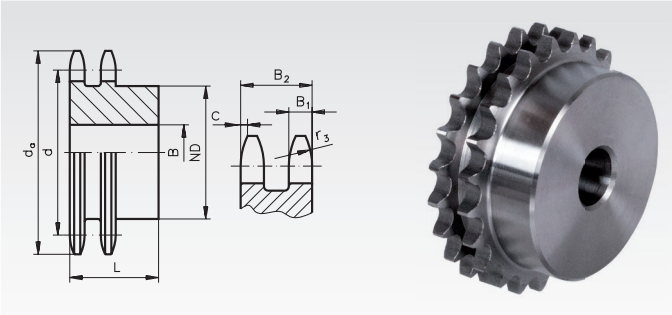

Material: Steel C45, not hardened.
Pre-bored.
Sprockets marked with * are made from grey cast iron GG22.

Ordering Details: e.g.: Product No. 127 111 00, ZRS, 3/4 x 7/16“, 11 Teeth

Pitch 3/4 x 7/16“ ZRS
B_1 = 10.8 mm, B_2 = 30.3 mm c = 2.0 mm, r_3 = 19 mm

Product No.	Number of teeth	d_a mm	d mm	ND mm	B mm	L mm	Weight kg
127 111 00	11	75,0	67,61	47	16	50	0,83
127 112 00	12	81,5	73,61	53	16	50	1,03
127 113 00	13	87,5	79,59	59	16	50	1,26
127 114 00	14	93,6	85,61	65	16	50	1,52
127 115 00	15	99,8	91,63	71	16	50	1,79
127 116 00	16	105,5	97,65	77	20	50	2,04
127 117 00	17	111,5	103,67	83	20	50	2,37
127 118 00	18	118,0	109,71	89	20	50	2,71
127 119 00	19	124,2	115,75	95	20	50	3,08
127 120 00	20	129,7	121,78	100	20	50	3,45
127 121 00	21	136,0	127,82	100	20	50	3,70
127 122 00	22	141,8	133,86	100	20	50	3,97
127 123 00	23	149,0	139,90	110	20	50	4,51
127 124 00	24	153,9	145,94	110	20	50	4,82
127 125 00	25	160,0	152,00	120	20	50	5,41
127 130 00	30	190,5	182,25	120	20	50	7,20
127 132 00	32	203,3	194,35	130	20	50	8,00
127 138 00	38	239,0	230,69	130	25	50	10,89
127 145 00*	45	282,5	273,10	110	30	63	8,33
127 157 00*	57	354,0	345,81	120	30	63	10,53
127 176 00*	76	469,9	460,99	135	30	63	16,04

Double-Strand plate wheels ZRL, ISO 12 B-2

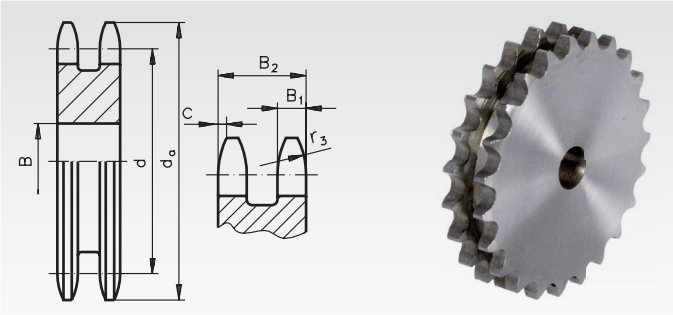

Material: Low-carbon steel, not hardable.
Pre-bored.

Ordering Details: e.g.: Product No. 127 211 00, ZRL, 3/4 x 7/16“, 11 Teeth

Pitch 3/4 x 7/16“ ZRL
B_1 = 10.8 mm, B_2 = 30.3 mm c = 2.0 mm, r_3 = 19 mm

Product No.	Number of teeth	d_a mm	d mm	B mm	Weight kg
127 211 00	11	75,0	67,61	14	0,56
127 212 00	12	81,5	73,61	14	0,72
127 213 00	13	87,5	79,59	14	0,88
127 214 00	14	93,6	85,61	16	1,04
127 215 00	15	99,8	91,63	16	1,21
127 216 00	16	105,5	97,65	16	1,41
127 218 00	18	118,0	109,71	16	1,81
127 220 00	20	129,7	121,78	16	2,31
127 222 00	22	141,8	133,86	20	2,79
127 224 00	24	153,9	145,94	20	3,43
127 227 00	27	172,3	164,09	20	4,38
127 230 00	30	190,5	182,25	20	5,49
127 235 00	35	221,0	212,52	20	7,58
127 238 00	38	239,0	230,69	25	8,99
127 245 00	45	282,5	273,10	25	12,86
127 248 00	48	300,1	291,27	25	14,50
127 257 00	57	355,4	345,81	25	20,85
127 276 00	76	469,9	460,99	30	37,50
127 283 00	95	585,1	576,17	30	58,00
127 288 00	114	700,6	691,36	30	86,00

*

Sprockets marked with * are made from grey cast iron GG22.

Reworking within 24h-service possible. Custom made parts on request.

Double-Strand Sprockets ZRS with Hub, ISO 16 B-2

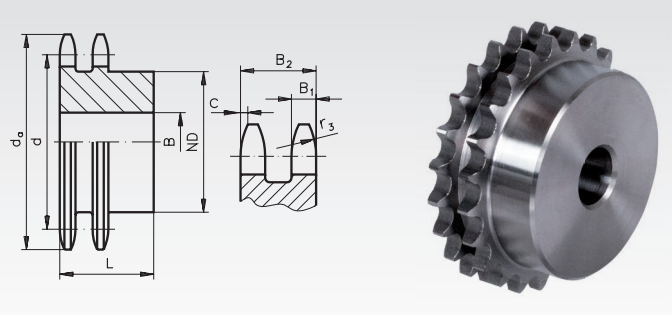

Material: Steel C45, not hardened.
Pre-bored.
Sprockets marked with * are made from grey cast iron GG22.

Ordering Details: e.g.: Product No. 128 111 00, ZRS, 1" x 17.02, 11 Teeth

Pitch 1" x 17.02 mm ZRS
B_1 = 15.8 mm, B_2 = 47.7 mm c = 2.5 mm, r_3 = 26 mm

Product No.	Number of teeth	d_a mm	d mm	ND mm	B mm	L mm	Weight kg
128 111 00	11	99,5	90,14	64	20	70	2,16
128 112 00	12	109,0	98,14	72	20	70	2,70
128 113 00	13	117,0	106,12	80	20	70	3,27
128 114 00	14	125,0	114,15	88	20	70	3,91
128 115 00	15	133,0	122,17	96	20	70	4,59
128 116 00	16	141,0	130,20	104	20	70	5,32
128 117 00	17	149,0	138,22	112	20	70	6,11
128 118 00	18	157,0	146,28	120	20	70	6,98
128 119 00	19	165,2	154,33	128	20	70	7,93
128 120 00	20	173,2	162,38	130	20	70	8,61
128 121 00	21	181,2	170,43	130	25	70	9,28
128 123 00	23	197,5	186,53	130	25	70	10,90
128 125 00	25	213,5	202,66	130	25	70	12,70
128 130 00	30	254,0	243,00	130	25	70	17,60
128 138 00*	38	320,0	307,59	140	40	75	18,60
128 145 00*	45	377,0	364,13	150	40	75	19,40
128 157 00*	57	474,0	461,08	170	40	90	31,00
128 176 00*	76	627,0	614,65	175	40	95	41,50

Double-Strand plate wheels ZRL, ISO 16 B-2

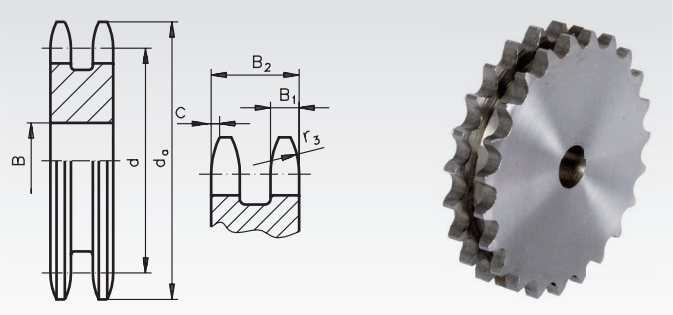

Material: Low-carbon steel, not hardable.
Pre-bored.

Ordering Details: e.g.: Product No. 128 211 00, ZRL, 1" x 17.02, 11 Teeth

Pitch 1" x 17.02 mm ZRL
B_1 = 15.8 mm, B_2 = 47.7 mm c = 2.5 mm, r_3 = 26 mm

Product No.	Number of teeth	d_a mm	d mm	B mm	Weight kg
128 211 00	11	99,5	90,14	20	1,63
128 212 00	12	109,0	98,14	20	1,98
128 214 00	14	125,0	114,15	20	2,86
128 216 00	16	141,0	130,20	20	3,86
128 218 00	18	157,0	146,28	20	5,10
128 220 00	20	173,0	162,38	20	6,30
128 222 00	22	189,3	178,48	25	7,80
128 224 00	24	205,5	194,59	25	9,40
128 227 00	27	229,6	218,79	25	12,20
128 230 00	30	254,0	243,00	25	15,20
128 235 00	35	296,2	283,36	25	21,00
128 238 00	38	320,7	307,59	25	25,00
128 245 00	45	377,1	364,13	25	35,50
128 248 00	48	401,3	388,36	30	39,00
128 257 00	57	474,0	461,07	40	53,50

Sprockets marked with * are made from grey cast iron GG22.

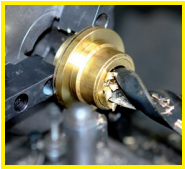

Reworking within 24h-service possible. Custom made parts on request.

Double-Strand Sprockets ZRS with Hub, ISO 20 B-2

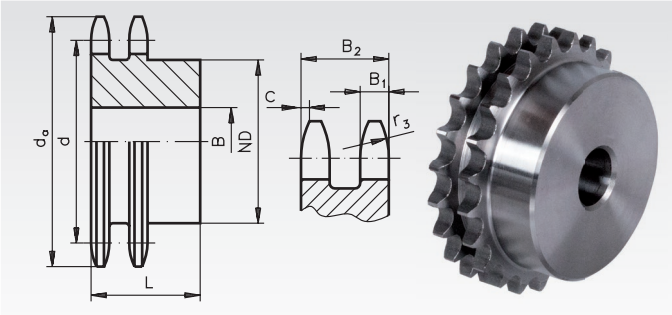

Material: Steel C45, not hardened.
Pre-bored.

Ordering Details: e.g.: Product No. 129 110 00, ZRS, 20B-2, 10 Teeth

Pitch 1 1/4 x 3/4", ZRS
B_1 = 18,5 mm, B_2 = 54,6 mm, c = 3,5 mm, r_3 = 32 mm

Product No.	Number of teeth	d_a mm	d mm	ND mm	B mm	L mm	Weight kg
129 110 00	10	117,0	102,74	70	20	75	2,85
129 111 00	11	127,0	112,68	80	20	80	3,72
129 112 00	12	137,0	122,68	90	20	80	4,66
129 113 00	13	147,5	132,65	100	20	80	5,70
129 114 00	14	157,6	142,68	110	20	80	6,84
129 115 00	15	167,7	152,72	120	20	80	8,08
129 116 00	16	177,7	162,75	120	25	80	8,90
129 117 00	17	187,7	172,78	120	25	80	9,92
129 118 00	18	197,8	182,85	120	25	80	11,00
129 119 00	19	207,9	192,91	120	25	80	12,16
129 120 00	20	217,9	202,98	120	25	80	13,38
129 125 00	25	268,4	253,33	140	25	80	21,36
129 130 00	30	318,7	303,75	150	25	80	30,69

Double-Strand Sprockets ZRS with Hub, ISO 24 B-2

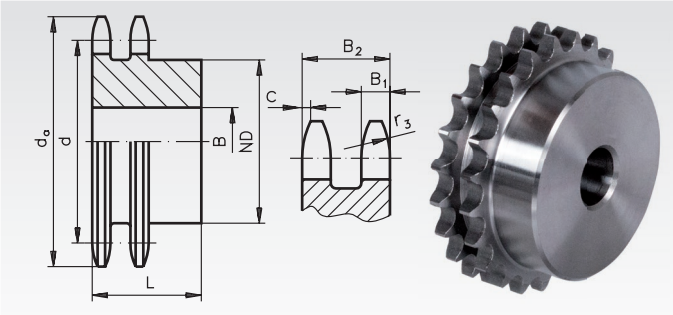

Material: Steel C45, not hardened.
Pre-bored.
Sprockets marked with 1) made from St52 with welded in hub.

Ordering Details: e.g.: Product No. 129 510 00, ZRS, 24B-2, 10 Teeth

Pitch 1 1/2 x 1", ZRS
B_1 = 24,1 mm, B_2 = 72,0 mm, c = 4 mm, r_3 = 38 mm

Product No.	Number of teeth	d_a mm	d mm	ND mm	B mm	L mm	Weight kg
129 510 00	10	137,0	123,29	80	25	95	5,01
129 511 00	11	149,0	135,21	90	25	100	6,62
129 512 00	12	161,0	147,22	102	25	100	8,28
129 513 00	13	173,0	159,18	114	25	100	10,13
129 514 00	14	185,0	171,22	128	25	100	12,24
129 515 00	15	197,0	183,26	132	25	100	14,08
129 516 00	16	209,0	195,30	136	25	100	15,88
129 517 00	17	221,0	207,34	136	25	100	17,80
129 518 00	18	233,0	219,42	160	25	100	21,08
129 519 00	19	245,5	231,49	160	25	100	23,26
129 520 00	20	257,5	243,57	160	25	100	25,57
129 525 00	25	319,0	304,00	160	25	100	39,09
129 530 00	30[1)]	379,5	364,50	160	30	100	55,88

Reworking within 24h-service possible. Custom made parts on request.

Triple-Strand Sprockets DRT for Taper Bushes

Material: Steel C45, not hardened.

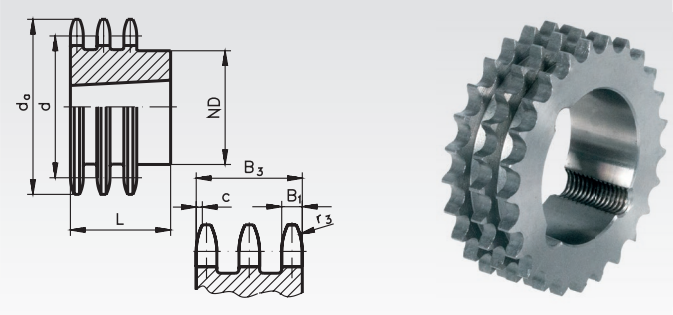

Ordering Details: e.g.: Product No. 131 771 17, DRT, Pitch 3/8 x 7/32", 17 Teeth, Dimension bore with Reference to Taper Bush Type, see page 76.

Pitch 3/8 x 7/32" DRT, ISO 06 B-3, B_1 = 5.3 mm, B_3 = 25.6, c = 1.0 mm, r_3 = 10 mm

Product No.	Number of teeth	d_a mm	d mm	ND[1] mm	L mm	Weight kg	Taper Bush ype Page 76
131 771 17	17	55,3	51,83	-	25,6	0,15	1008
131 771 19	19	61,3	57,87	-	25,6	0,24	1008
131 771 21	21	68,0	63,91	-	25,6	0,34	1008
131 771 23	23	73,5	69,95	-	25,6	0,30	1210
131 771 25	25	80,0	76,00	-	25,6	0,41	1210
131 771 27	27	86,0	82,05	-	25,6	0,55	1210
131 771 30	30	94,7	91,12	79	38	0,88	1615
131 771 38	38	119,5	115,35	90	38	1,75	1615

[1] Up to 27 teeth without hub.

Pitch 1/2 x 5/16" DRT, ISO 08 B-3, B_1 = 7.2 mm, B_3 = 34.9, c = 1.3 mm, r_3 = 13 mm

Product No.	Number of teeth	d_a mm	d mm	ND[1] mm	L mm	Weight kg	Taper Bush Type Page 76
135 771 15	15	65,0	61,09	-	34,9	0,36	1008
135 771 17	17	73,6	69,11	-	34,9	0,35	1210
135 771 19	19	81,7	77,16	-	34,9	0,61	1210
135 771 21	21	89,7	85,22	-	34,9	0,65	1610
135 771 23	23	98,2	93,27	-	34,9	0,93	1610
135 771 25	25	105,8	101,33	-	34,9	0,85	2012
135 771 27	27	114,0	109,40	-	34,9	1,18	2012
135 771 30	30	126,1	121,50	-	34,9	1,73	2012
135 771 38	38	158,6	153,80	-	34,9	3,53	2012

[1] Without hub.

Pitch 5/8 x 3/8" DRT, ISO 10 B-3, B_1 = 9.1 mm, B_3 = 42.1, c = 1.6 mm, r_3 = 16 mm

Product No.	Number of teeth	d_a mm	d mm	ND[1] mm	L mm	Weight kg	Taper Bush Type Page 76
136 771 15	15	83,2	76,35	-	42,1	0,63	1210
136 771 17	17	93,3	86,39	-	42,1	1,01	1210
136 771 19	19	103,3	96,44	-	42,1	1,19	1615
136 771 21	21	113,4	106,51	-	42,1	1,66	1615
136 771 23	23	123,5	116,58	-	42,1	1,78	2012
136 771 25	25	133,6	126,66	105	44	1,81	2517
136 771 27	27	143,6	136,74	110	44	2,45	2517
136 771 30	30	158,8	151,87	120	44	3,54	2517

[1] Up to 23 teeth without hub.

Pitch 3/4 x 7/16" DRT, ISO 12 B-3, B_1 = 11.1 mm, B_3 = 49.8, c = 2.0 mm, r_3 = 19 mm

Product No.	Number of teeth	d_a mm	d mm	ND[1] mm	L mm	Weight kg	Taper Bush Type Page 76
137 771 15	15	99,8	91,62	-	49,8	1,11	1615
137 771 17	17	111,8	103,67	-	49,8	1,75	2012
137 771 19	19	123,9	115,73	-	49,8	2,02	2012
137 771 21	21	136,0	127,81	-	49,8	2,09	2517
137 771 23	23	148,1	139,90	-	49,8	3,00	2517
137 771 25	25	160,2	151,99	-	49,8	3,98	2517
137 771 27	27	172,3	164,09	140	51	3,90	3020
137 771 30	30	190,4	182,24	140	51	5,64	3020
137 771 38	38	238,9	230,69	140	51	11,58	3020

[1] Up to 25 teeth without hub.

Pitch 1" x 17.02 mm, DRT, ISO 16 B-3, B_1 = 16.2 mm, B_3 = 79.6, c = 2.5 mm, r_3 = 26 mm

Product No.	Number of teeth	d_a mm	d mm	ND[1] mm	L mm	Weight kg	Taper Bush Type Page 76
138 771 17	17	149,8	138,23	-	79,6	4,29	2517
138 771 19	19	165,9	154,31	-	79,6	4,36	3020
138 771 21	21	182,0	170,42	-	79,6	6,69	3030
138 771 23	23	198,1	186,53	-	79,6	7,80	3525
138 771 25	25	213,5	202,66	-	79,6	10,93	3525
138 771 27	27	230,4	218,79	-	79,6	14,06	3525
138 771 30	30	254,6	242,99	-	79,6	19,10	3525

[1] Up to 21 teeth without hub.

Taper Bushes page 76

Description and mounting instructions page 824

Triple-Strand Sprockets DRS with Hub, ISO 06 B-3

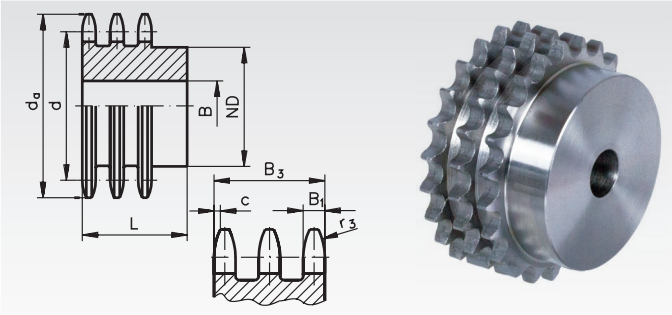

Material: Steel C45, not hardened.
Pre-bored.
Sprockets marked with * are made from grey cast iron GG22.

Ordering Details: e.g.: Product No. 131 108 00, DRS, 3/8 x 7/32", 8 Teeth

Pitch 3/8 x 7/32" DRS,
B_1 = 5.2 mm, B_3 = 25.6 mm, c = 1.0 mm, r_3 = 10 mm

Product No.	Number of teeth	d_a mm	d mm	ND mm	B mm	L mm	Weight kg
131 108 00	8	28,6	24,89	15	8	32	0,05
131 110 00	10	34,5	30,82	20	10	32	0,09
131 111 00	11	37,5	33,80	22	12	35	0,11
131 112 00	12	40,5	36,80	25	12	35	0,15
131 113 00	13	43,5	39,80	28	12	35	0,19
131 114 00	14	46,5	42,80	31	12	35	0,23
131 115 00	15	49,5	45,81	34	12	35	0,28
131 116 00	16	52,5	48,82	37	12	35	0,33
131 117 00	17	55,5	51,83	40	12	35	0,39
131 118 00	18	58,6	54,85	43	12	35	0,45
131 119 00	19	61,6	57,87	46	12	35	0,51
131 120 00	20	64,6	60,89	49	12	35	0,58
131 121 00	21	67,6	63,91	52	16	40	0,70
131 122 00	22	70,6	66,93	55	16	40	0,78
131 123 00	23	73,7	69,95	58	16	40	0,87
131 124 00	24	76,7	72,97	61	16	40	0,97
131 125 00	25	79,7	76,00	64	16	40	1,06
131 126 00	26	82,7	79,02	67	16	40	1,17
131 127 00	27	85,7	82,04	70	16	40	1,27
131 128 00	28	88,8	85,07	73	16	40	1,39
131 129 00	29	91,8	88,09	76	16	40	1,50
131 130 00	30	94,8	91,12	79	16	40	1,62
131 132 00	32	100,9	97,17	80	16	40	1,80
131 135 00	35	110,0	106,26	85	16	40	2,15
131 138 00	38	119,0	115,34	90	16	40	2,53
131 145 00*	45	141,1	136,54	90	24	56	3,56
131 157 00*	57	177,5	172,91	90	24	56	3,97
131 176 00*	76	235,1	230,49	100	24	56	4,52
131 183 00*	95	292,7	288,08	100	24	56	6,12
131 188 00*	114	350,3	345,68	100	24	56	7,45

Triple-Strand plate wheels DRL, ISO 06 B-3

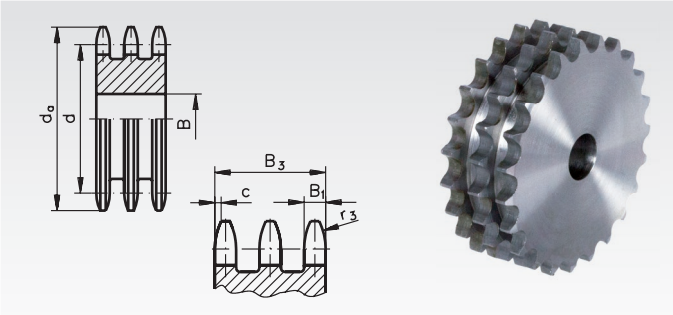

Material: Low-carbon steel, not hardable.
Pre-bored.

Ordering Details: e.g.: Product No. 131 208 00, DRL, 3/8 x 7/32", 8 Teeth

Pitch 3/8 x 7/32" DRL,
B_1 = 5.2 mm, B_3 = 25.6 mm, c = 1.0 mm, r_3 = 10 mm

Product No.	Number of teeth	d_a mm	d mm	B mm	Weight kg
131 208 00	8	28,6	24,89	8	0,04
131 211 00	11	37,5	33,80	12	0,09
131 212 00	12	40,5	36,80	12	0,12
131 213 00	13	43,5	39,80	12	0,15
131 214 00	14	46,5	42,80	12	0,18
131 215 00	15	49,5	45,81	12	0,22
131 216 00	16	52,5	48,82	12	0,26
131 217 00	17	55,5	51,83	12	0,30
131 218 00	18	58,6	54,85	12	0,35
131 219 00	19	61,6	57,87	12	0,39
131 220 00	20	64,6	60,89	12	0,44
131 221 00	21	67,6	63,91	16	0,48
131 222 00	22	70,6	66,93	16	0,54
131 223 00	23	73,7	69,95	16	0,59
131 224 00	24	76,7	72,97	16	0,66
131 225 00	25	79,7	76,00	16	0,72
131 226 00	26	82,7	79,02	16	0,79
131 227 00	27	85,7	82,04	16	0,86
131 228 00	28	88,8	85,07	16	0,93
131 230 00	30	94,8	91,12	16	1,09
131 238 00	38	119,0	115,34	20	1,81
131 240 00	40	125,1	121,40	20	2,02
131 242 00	42	132,1	127,46	20	2,25
131 245 00	45	141,1	136,54	20	2,61
131 248 00	48	150,2	145,64	20	2,99
131 257 00	57	177,5	172,91	25	4,28
131 276 00	76	235,1	230,49	25	7,83
131 283 00	95	292,7	288,08	25	12,42

Reworking within 24h-service possible. Custom made parts on request.

Triple-Strand Sprockets DRS with Hub, ISO 08 B-3

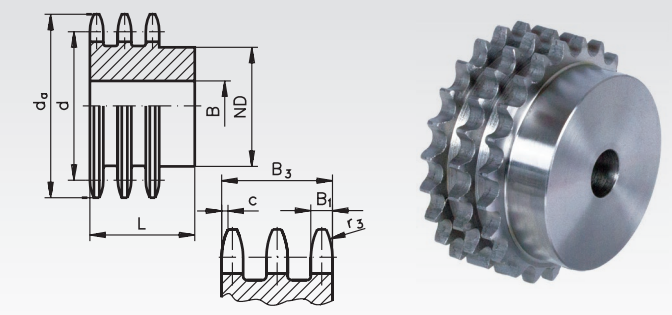

Material: Steel C45, not hardened.
Pre-bored.
Sprockets marked with * are made from grey cast iron GG22.

Ordering Details: e.g.: Product No. 135 108 00, DRS, 1/2 x 5/16“, 8 Teeth

Pitch 1/2 x 5/16“ DRS,
B_1 = 7 mm, B_3 = 34.9 mm, c = 1.3 mm, r_3 = 13 mm

Product No.	Number of teeth	d_a mm	d mm	ND mm	B mm	L mm	Weight kg
135 108 00	8	38,0	33,18	20	10	46	0,13
135 110 00	10	45,9	41,10	28	12	46	0,24
135 111 00	11	49,9	45,07	32	16	50	0,31
135 112 00	12	53,9	49,07	35	16	50	0,39
135 113 00	13	57,9	53,06	38	16	50	0,49
135 114 00	14	61,9	57,07	42	16	50	0,60
135 115 00	15	65,9	61,09	46	16	50	0,72
135 116 00	16	69,9	65,10	50	16	50	0,85
135 117 00	17	74,0	69,11	54	16	50	0,99
135 118 00	18	78,0	73,14	58	16	50	1,14
135 119 00	19	82,0	77,16	62	16	50	1,30
135 120 00	20	86,0	81,19	66	16	50	1,47
135 121 00	21	90,1	85,22	70	20	55	1,79
135 122 00	22	94,1	89,24	70	20	55	1,93
135 123 00	23	98,1	93,27	70	20	55	2,08
135 124 00	24	102,1	97,29	75	20	55	2,32
135 125 00	25	106,2	101,33	80	20	55	2,57
135 126 00	26	110,2	105,36	85	20	55	2,79
135 127 00	27	114,2	109,40	85	20	55	2,96
135 128 00	28	118,3	113,42	90	20	55	3,25
135 129 00	29	122,3	117,46	95	20	55	3,55
135 130 00	30	126,3	121,50	100	20	55	3,86
135 135 00	35	146,5	141,68	110	20	55	5,20
135 136 00	36	150,6	145,72	120	25	55	5,64
135 138 00	38	158,6	153,80	120	25	55	6,14
135 145 00*	45	188,6	182,07	100	24	60	5,85
135 157 00*	57	237,1	230,54	100	24	60	6,28
135 176 00*	76	313,9	307,33	100	24	60	8,60
135 183 00*	95	390,7	384,11	120	24	67	11,90

Triple-Strand Plate wheels DRL, ISO 08 B-3

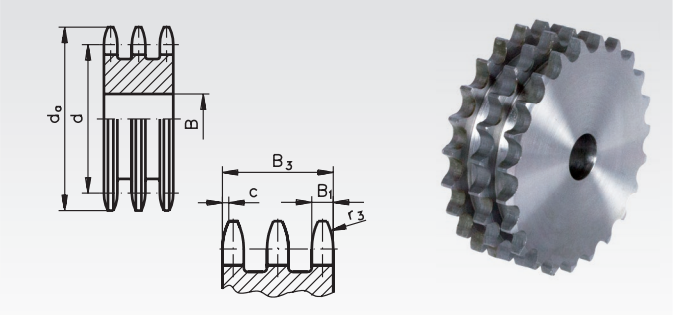

Material: Low-carbon steel, not hardable.
Pre-bored.

Ordering Details: e.g.: Product No. 135 208 00, DRL, 1/2 x 5/16“, 8 Teeth

Pitch 1/2 x 5/16“ DRL,
B_1 = 7 mm, B_3 = 34.9 mm, c = 1.3 mm, r_3 = 13 mm

Product No.	Number of teeth	d_a mm	d mm	B mm	Weight kg
135 208 00	8	38,0	33,18	10	0,11
135 210 00	10	45,9	41,10	10	0,21
135 211 00	11	49,9	45,07	12	0,26
135 212 00	12	53,9	49,07	12	0,33
135 213 00	13	57,9	53,06	12	0,40
135 214 00	14	61,9	57,07	12	0,48
135 215 00	15	65,9	61,09	12	0,57
135 216 00	16	69,9	65,10	16	0,64
135 217 00	17	74,0	69,11	16	0,74
135 218 00	18	78,0	73,14	16	0,85
135 219 00	19	82,0	77,16	16	0,97
135 220 00	20	86,0	81,19	16	1,09
135 221 00	21	90,1	85,22	16	1,22
135 222 00	22	94,1	89,24	16	1,36
135 223 00	23	98,1	93,27	16	1,50
135 224 00	24	102,1	97,29	16	1,63
135 225 00	25	106,2	101,33	16	1,81
135 226 00	26	110,2	105,36	16	1,98
135 227 00	27	114,2	109,40	16	2,15
135 228 00	28	118,3	113,42	16	2,33
135 229 00	29	122,3	117,46	16	2,52
135 230 00	30	126,3	121,50	16	2,71
135 235 00	35	146,5	141,68	20	3,76
135 236 00	36	150,6	145,72	20	3,99
135 238 00	38	158,6	153,80	20	4,49
135 240 00	40	166,7	161,87	20	5,00
135 245 00	45	188,6	182,07	25	6,39
135 257 00	57	237,1	230,54	25	10,53
135 276 00	76	313,9	307,33	25	19,17
135 283 00	95	390,7	384,11	25	30,36

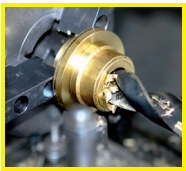

Reworking within 24h-service possible. Custom made parts on request.

Triple-Strand Sprockets DRS with Hub, ISO 10 B-3

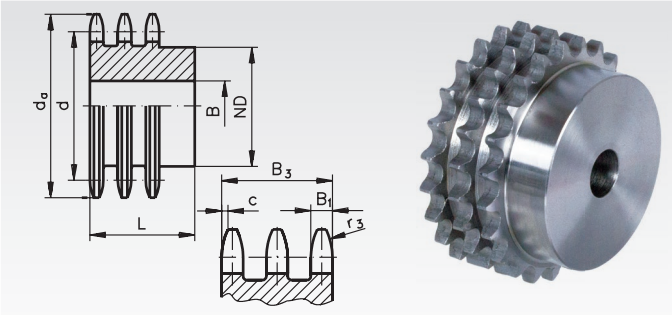

Material: Steel C45, not hardened.
Pre-bored.
Sprockets marked with * are made from grey cast iron GG22.

Ordering Details: e.g.: Product No. 136 108 00, DRS, 5/8 x 3/8", 8 Teeth

Pitch 5/8 x 3/8" DRS,
B_1 = 9 mm, B_3 = 42.1 mm, c = 1.6 mm, r_3 = 16 mm

Product No.	Number of teeth	d_a mm	d mm	ND mm	B mm	L mm	Weight kg
136 108 00	8	48,4	41,48	25	12	55	0,27
136 110 00	10	58,3	51,37	35	16	55	0,47
136 111 00	11	63,2	56,34	39	16	55	0,61
136 112 00	12	68,2	61,34	44	16	55	0,78
136 113 00	13	73,2	66,32	49	16	55	0,96
136 114 00	14	78,2	71,34	54	16	55	1,15
136 115 00	15	83,2	76,36	59	16	55	1,37
136 116 00	16	88,3	81,37	64	16	60	1,72
136 117 00	17	93,3	86,39	69	16	60	1,99
136 118 00	18	98,3	91,42	74	16	60	2,27
136 119 00	19	103,3	96,45	79	16	60	2,58
136 120 00	20	108,4	101,49	84	16	60	2,91
136 121 00	21	113,4	106,52	85	20	60	3,12
136 122 00	22	118,4	111,55	90	20	60	3,48
136 123 00	23	123,5	116,58	95	20	60	3,86
136 124 00	24	128,5	121,62	100	20	60	4,25
136 125 00	25	133,6	126,66	105	20	60	4,67
136 127 00	27	143,6	136,75	110	20	60	5,43
136 130 00	30	158,8	151,87	120	20	60	6,65
136 138 00	38	199,1	192,24	120	25	60	10,08
136 145 00*	45	236,0	227,58	100	32	60	7,04
136 157 00*	57	296,6	288,18	100	32	63	8,00
136 176 00*	76	392,5	384,16	110	35	67	12,00
136 183 00*	95	488,5	480,14	125	35	70	19,40
136 188 00*	114	584,5	576,13	125	35	80	24,00

Triple-Strand plate wheels DRL, ISO 10 B-3

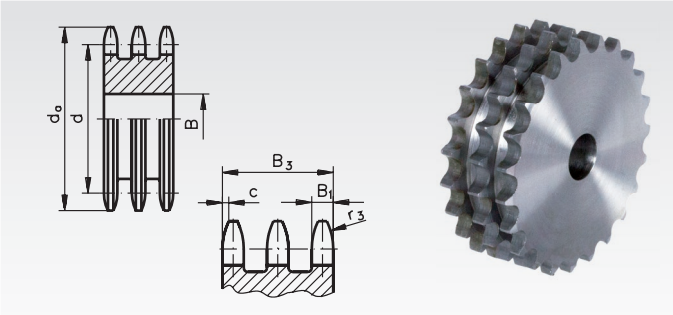

Material: Low-carbon steel, not hardable.
Pre-bored.

Ordering Details: e.g.: Product No. 136 208 00, DRL, 5/8 x 3/8", 8 Teeth

Pitch 5/8 x 3/8" DRL,
B_1 = 9 mm, B_3 = 42.1 mm, c = 1.6 mm, r_3 = 16 mm

Product No.	Number of teeth	d_a mm	d mm	B mm	Weight kg
136 208 00	8	48,4	41,48	12	0,23
136 212 00	12	68,2	61,34	12	0,67
136 213 00	13	73,2	66,32	12	0,81
136 214 00	14	78,2	71,34	12	0,97
136 215 00	15	83,2	76,36	12	1,14
136 216 00	16	88,3	81,37	16	1,29
136 217 00	17	93,3	86,39	16	1,49
136 218 00	18	98,3	91,42	16	1,70
136 219 00	19	103,3	96,45	16	1,92
136 220 00	20	108,4	101,49	16	2,15
136 221 00	21	113,4	106,52	16	2,40
136 222 00	22	118,4	111,55	16	2,66
136 223 00	23	123,5	116,58	16	2,94
136 224 00	24	128,5	121,62	16	3,23
136 225 00	25	133,6	126,66	16	3,53
136 227 00	27	143,6	136,75	20	4,13
136 228 00	28	148,7	141,78	20	4,47
136 229 00	29	153,7	146,83	20	4,83
136 230 00	30	158,8	151,87	20	5,20
136 235 00	35	184,0	177,10	20	7,23
136 238 00	38	199,1	192,24	25	8,55
136 245 00	45	236,0	227,58	25	12,24
136 257 00	57	296,6	288,18	25	20,06
136 283 00	95	488,5	480,14	30	57,32
136 288 00	114	584,5	576,13	30	83,15

Reworking within 24h-service possible. Custom made parts on request.

Triple-Strand Sprockets DRS with Hub, ISO 12 B-3

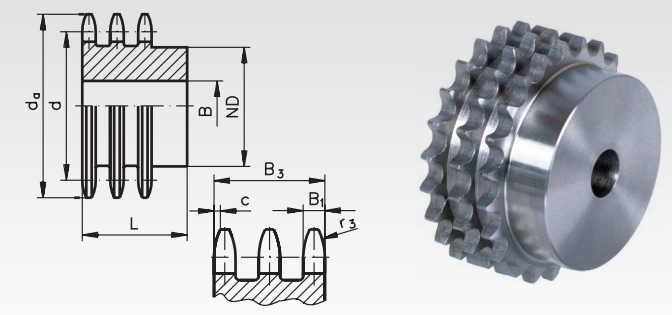

Material: Steel C45, not hardened.
Pre-bored.
Sprockets marked with * are made from grey cast iron GG22.

Ordering Details: e.g.: Product No. 137 108 00, DRS, 3/4 x 7/16“, 8 Teeth

Pitch 3/4 x 7/16“ DRS,
B_1 = 10.8 mm, B_3 = 49.8 mm, c = 2.0 mm, r_3 = 19 mm

Product No.	Number of teeth	d_a mm	d mm	ND mm	B mm	L mm	Weight kg
137 108 00	8	58,0	49,78	31	16	65	0,45
137 110 00	10	69,8	61,64	42	16	65	0,86
137 111 00	11	75,8	67,61	47	20	70	1,09
137 112 00	12	81,8	73,60	53	20	70	1,39
137 113 00	13	87,8	79,59	59	20	70	1,72
137 114 00	14	93,8	85,61	65	20	70	2,08
137 115 00	15	99,8	91,63	71	20	70	2,47
137 116 00	16	105,8	97,65	77	20	70	2,89
137 117 00	17	111,9	103,67	83	20	70	3,34
137 118 00	18	117,9	109,71	89	20	70	3,83
137 119 00	19	123,9	115,75	95	20	70	4,35
137 120 00	20	130,0	121,78	100	20	70	4,87
137 121 00	21	136,0	127,82	100	20	70	5,20
137 122 00	22	142,0	133,86	100	20	70	5,65
137 123 00	23	148,1	139,90	110	20	70	6,38
137 124 00	24	154,1	145,94	110	20	70	6,87
137 125 00	25	160,2	152,00	120	20	70	7,77
137 130 00	30	190,4	182,25	120	20	70	10,59
137 138 00	38	238,9	230,69	130	25	70	16,73
137 145 00*	45	283,2	273,10	140	30	70	13,30
137 157 00*	57	355,9	345,81	140	40	70	15,25
137 176 00*	76	471,1	460,99	160	40	75	27,20
137 183 00*	95	586,2	576,17	170	40	82	36,40

Triple-Strand Plate wheels DRL, ISO 12 B-3

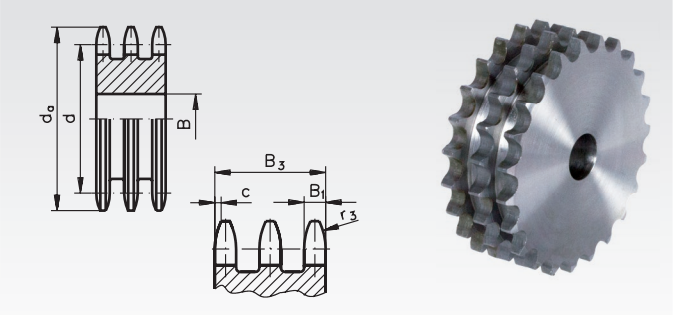

Material: Low-carbon steel, not hardable.
Pre-bored.

Ordering Details: e.g.: Product No. 137 211 00, DRL, 3/4 x 7/16“, 11 Teeth

Pitch 3/4 x 7/16“ DRL,
B_1 = 10.8 mm, B_3 = 49.8 mm, c = 2.0 mm, r_3 = 19 mm

Product No.	Number of teeth	d_a mm	d mm	B mm	Weight kg
137 211 00	11	75,8	67,61	16	0,91
137 212 00	12	81,8	73,50	16	1,13
137 213 00	13	87,8	79,59	16	1,38
137 214 00	14	93,8	85,61	16	1,64
137 215 00	15	99,8	91,63	16	1,93
137 216 00	16	105,8	97,65	20	2,20
137 217 00	17	111,9	103,67	20	2,54
137 218 00	18	117,9	109,71	20	2,89
137 219 00	19	123,9	115,75	20	3,27
137 220 00	20	130,0	121,78	20	3,67
137 222 00	22	142,0	133,86	20	4,55
137 225 00	25	160,2	152,00	20	6,02
137 230 00	30	190,4	182,25	20	8,97
137 235 00	35	220,7	212,52	25	12,35
137 238 00	38	238,9	230,69	25	14,70
137 240 00	40	251,0	242,81	25	16,40
137 245 00	45	283,2	273,10	25	21,00
137 248 00	48	301,4	291,27	25	24,04
137 257 00	57	355,9	345,81	30	34,28
137 276 00	76	471,1	460,99	30	62,09
137 283 00	95	586,2	576,17	30	98,04

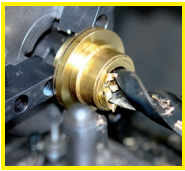

Reworking within 24h-service possible. Custom made parts on request.

Triple-Strand Sprockets DRS with Hub, ISO 16 B-3

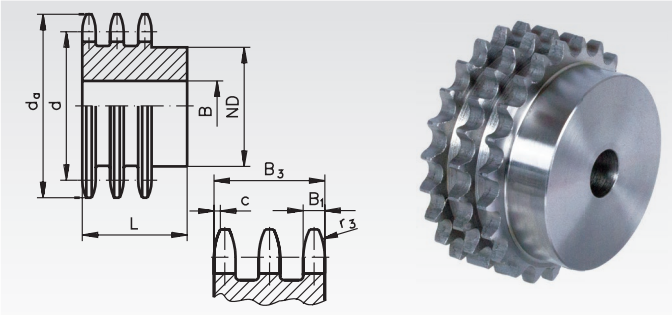

Material: Steel C45, not hardened.
Pre-bored.
Sprockets marked with * are made from grey cast iron GG22.

Ordering Details: e.g.: Product No. 138 108 00, DRS, 1" x 17.02, 8 Teeth

Pitch 1" x 17.02 mm DRS,
B_1 = 15.8 mm, B_3 = 79.6 mm, c = 2.5 mm, r_3 = 26 mm

Product No.	Number of teeth	d_a mm	d mm	ND mm	B mm	L mm	Weight kg
138 108 00	8	77,9	66,37	42	20	95	1,19
138 109 00	9	85,8	74,27	50	20	95	1,68
138 110 00	10	93,8	82,19	56	20	95	2,24
138 111 00	11	101,7	90,14	64	25	100	2,86
138 112 00	12	109,7	98,14	72	25	100	3,62
138 113 00	13	117,7	106,12	80	25	100	4,45
138 114 00	14	125,7	114,15	88	25	100	5,37
138 115 00	15	133,7	122,17	96	25	100	6,37
138 116 00	16	141,8	130,20	104	30	100	7,45
138 117 00	17	149,8	138,22	112	30	100	8,60
138 118 00	18	157,8	146,28	120	30	100	9,84
138 119 00	19	165,9	154,33	128	30	100	11,16
138 120 00	20	173,9	162,38	130	30	100	12,36
138 121 00	21	182,0	170,43	130	30	100	13,56
138 122 00	22	190,1	178,48	130	30	100	14,82
138 123 00	23	198,1	186,53	130	30	100	16,15
138 124 00	24	206,2	194,59	130	30	100	17,53
138 125 00	25	213,5	202,66	130	30	100	18,99
138 126 00	26	222,3	210,72	130	30	100	20,34
138 127 00	27	230,4	218,79	130	30	100	21,92
138 128 00	28	238,4	226,85	130	30	100	23,57
138 129 00	29	246,5	234,92	130	30	100	25,27
138 130 00	30	254,6	243,00	130	30	100	27,05
138 131 00	31	262,6	251,08	140	30	100	29,23
138 132 00	32	270,7	259,13	140	30	100	31,13
138 135 00	35	294,9	283,36	140	30	100	37,23
138 136 00	36	303,0	291,44	140	30	100	39,39
138 138 00*	38	319,2	307,59	160	45	100	25,40
138 145 00*	45	377,9	364,12	160	45	100	33,60
138 157 00*	57	474,9	461,07	165	45	100	44,70
138 176 00*	76	628,4	614,65	200	45	110	63,10
138 183 00*	95	782,0	768,22	200	50	110	77,00
138 188 00*	114	935,6	921,81	200	50	115	97,00

Triple-Strand Plate wheels DRL, ISO 16 B-3

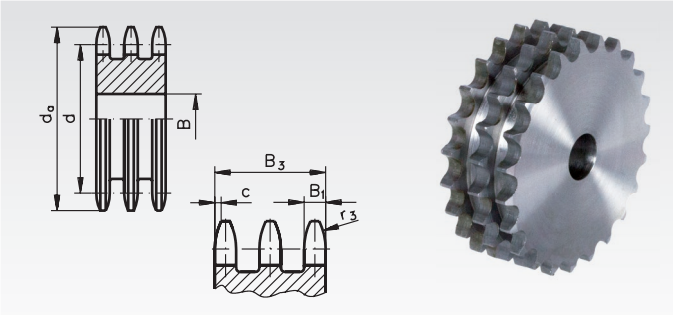

Material: Low-carbon steel, not hardable.
Pre-bored.

Ordering Details: e.g.: Product No. 138 208 00, DRL, 1" x 17.02, 8 Teeth

Pitch 1" x 17.02 mm DRL,
B_1 = 15.8 mm, B_3 = 79.6 mm, c = 2.5 mm, r_3 = 26 mm

Product No.	Number of teeth	d_a mm	d mm	B mm	Weight kg
138 208 00	8	77,9	66,37	20	1,13
138 210 00	10	93,8	82,19	20	2,05
138 212 00	12	109,7	98,14	20	3,15
138 214 00	14	125,7	114,15	20	4,59
138 216 00	16	141,8	130,20	30	6,16
138 218 00	18	157,8	146,28	30	8,11
138 220 00	20	173,9	162,38	30	10,31
138 222 00	22	190,1	178,48	30	12,77
138 224 00	24	206,2	194,59	30	14,49
138 227 00	27	230,4	218,79	30	19,91
138 230 00	30	254,6	243,00	30	25,04
138 235 00	35	294,9	283,36	30	34,88
138 238 00	38	319,2	307,59	30	41,56
138 245 00	45	377,9	364,12	30	59,36
138 248 00	48	402,1	388,36	30	67,69
138 257 00	57	474,9	461,07	40	96,87

Reworking within 24h-service possible. Custom made parts on request.

Mounting Options for Drive Wheels

There are several possibilities for mounting driving wheels (sprockets, V-Belt Pulleys, pulleys, spur gears etc.) or hubs on shafts. Most wheels are stocked with a rather small bore to allow for further machining. Machining works as drilling out, keywaying a.s.o. can be done at extra charge.

Please note: for several shaft diameters a number of sprockets, V-belt pulleys, spur gears and worm-gear sets are in stock "ready-to-install", i.e. with custom bore and keyway or prepared for Taper clamping bushes.

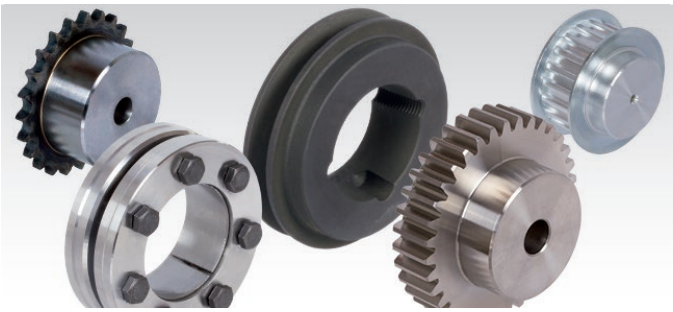

Fixing Pins

A hole is drilled through hub and shaft and both parts are then connected with a fixing pin. Usually only one side of the hub is pre-drilled, then the wheel is pushed onto the shaft and the hole is drilled through both shaft and the other side of the hub. Then the pin is driven in. This mounting method is suitable for low torques.

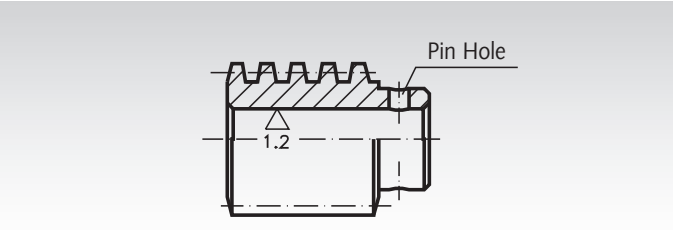

Feather Key Connection

Shaft and hub both receive a keyway, a key is pushed into the keyway of the hub. The wheel is pushed onto the shaft and secured against axial movement (with a set screw or with a stepped shaft and axial screw and washer at the end of the shaft). The most common kind of keyway is DIN 6885/1. Key connections are suitable for medium torques. Keys DIN 6885 see page 578 and 579. Boxes with an assortment of keys DIN 6885 see page 577.

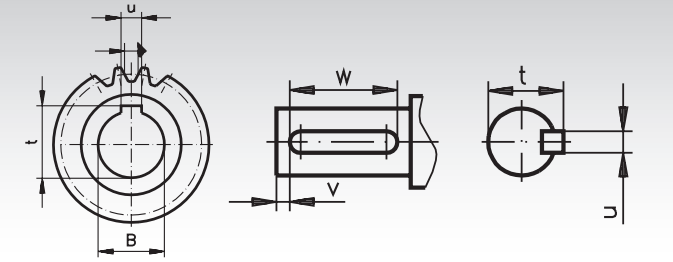

Clamping Sets, Clamping Bushes and Shrink Disks

Clamping sets and thin-walled clamping bushes are available for various diameters. They allow fast and easy mounting on round shafts. A keyway is not required. Shrink disks are special clamping sets which press a thin-walled hub onto a shaft. Clamping connections are suitable for rather high torques. **Clamping sets and bushes, and shrink disks** see page 330.

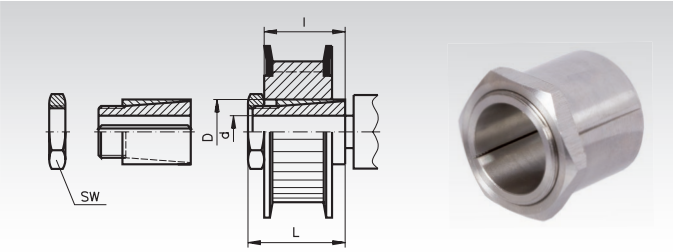

Taper Clamping Bushes

These customary conical bushes are used for easy and fast mounting of driving elements in Taper version. They can be used with and without key.

The bushes are available with various outer dimensions. For every outside measure there are bushes with many different bores available. This mounting method is cost-efficient and fast, and suitable for rather high torques. A large selection of cost-efficient driving elements in Taper version are available ex stock.

Taper clamping bushes see page 360.
Welding hubs for taper bushes see page 362.
Taper sprockets see page 74, 92, 101.
Taper V-belt pulleys see page 183.
Taper pulleys see page 154.
Taper couplings see page 388.

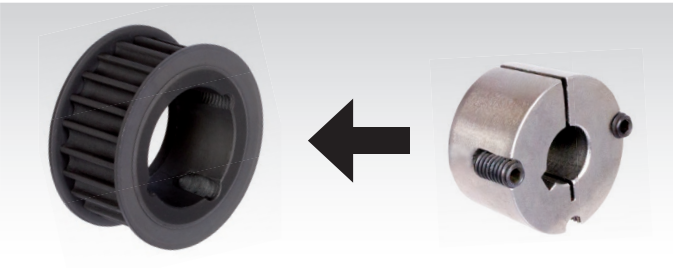

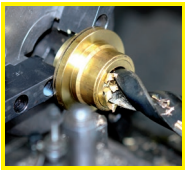

Reworking within 24h-service possible. Custom made parts on request.

CERTIFICATE

DEKRA

MAEDLER™
FOUNDED 1882

ISO 9001:2008

DEKRA Certification GmbH hereby certifies that the company

MAEDLER GmbH

Scope of certification:
Distributor of transmission components, standard parts, gear boxes and geared motors, pneumatic elements

Certified location:
D-70597 Stuttgart, Traenkestraße 6-8

has established and maintains a quality management system according to the above mentioned standard. The conformity was adduced with audit report no. A12081183.

This certificate is valid from 2012-12-20 to 2015-12-19

Certificate registration no.: 90395041/6
Duplicate

IAF
DAkkS Deutsche Akkreditierungsstelle D-ZM-16029-01-01

DEKRA Certification GmbH
Stuttgart, 2012-12-10

Lack of fulfilment on conditions as set out in the Certification Agreement may render this certificate invalid.

DEKRA Certification GmbH * Handwerkstraße 15 * D-70565 Stuttgart * www.dekra-certification.de

page 1 of 1

MÄDLER® meets even the highest quality requirements: Top quality, precision and reliability.

Certificates

on the internet at

www. maedler.de

in the sector Downloads

Chain Tensioning Wheels KSP with Bearing for Single-Strand Roller Chain DIN ISO 606 (ex DIN 8187)

Material: Sprocket steel C45, burnished.
Bearing made from roller bearing steel.

Ready-to-mount idlers, complete with bearing.

Cost-efficient. Can be mounted at the deflection or tensioning points. Perfect workmanship and stable mounting of the ball bearing with shields on both sides guarantee a high resistance against breakage and wear. Easy to mount by the extra long internal ring. Also suitable for agricultural and textile machines. Maintenance-free bearing, with grease filling.

Temperature range: -20° to +120°C.

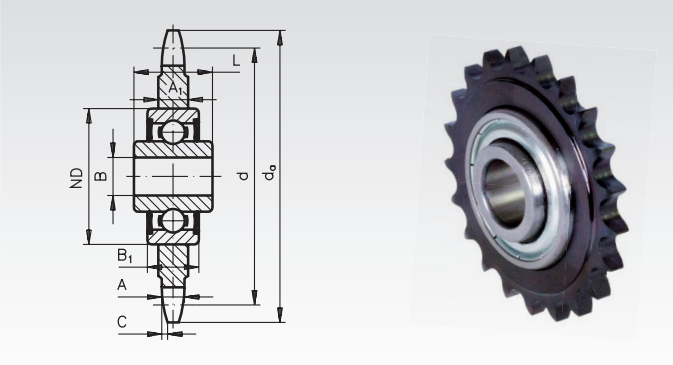

Ordering Details: e.g.: Product No. 140 000 00 KSP, 05 - B1

Product No.	DIN ISO	Pitch	Number of teeth	d_a mm	d mm	A mm	A_1 mm	C mm	B mm	ND mm	B_1 mm	L mm	Weight g
140 000 00	05 B-1	8mm	23	62,2	58,75	2,8	7,0	0,8	$16^{+0,26}_{+0,13}$	40	12	18,3	125
140 001 20	06 B-1	3/8 x 7/32“	20	64,3	60,89	5,3	7,0	1,0	$16^{+0,26}_{+0,13}$	40	12	18,3	135
140 001 00	06 B-1	3/8 x 7/32“	21	68,0	63,90	5,3	7,0	1,0	$16^{+0,26}_{+0,13}$	40	12	18,3	145
140 002 00	081	1/2 x 1/8“	18	78,9	73,14	3,0	7,0	1,3	$16^{+0,26}_{+0,13}$	40	12	18,3	170
140 003 16	083	1/2 x 3/16“	16	70,9	65,10	4,5	7,0	1,3	$16^{+0,26}_{+0,13}$	40	12	18,3	169
140 003 00	083	1/2 x 3/16“	18	78,9	73,14	4,5	7,0	1,3	$16^{+0,26}_{+0,13}$	40	12	18,3	195
140 005 14	08 B-1	1/2 x 5/16“	14	61,8	57,07	7,2	7,2	1,3	$16^{+0,26}_{+0,13}$	40	12	18,3	117
140 005 15	08 B-1	1/2 x 5/16“	15	65,5	61,09	7,2	7,2	1,3	$16^{+0,26}_{+0,13}$	40	12	18,3	145
140 005 16	08 B-1	1/2 x 5/16“	16	69,5	65,10	7,2	7,2	1,3	$16^{+0,26}_{+0,13}$	40	12	18,3	163
140 005 00	08 B-1	1/2 x 5/16“	18	77,8	73,14	7,2	7,2	1,3	$16^{+0,26}_{+0,13}$	40	12	18,3	210
140 005 20	08 B-1	1/2 x 5/16“	20	85,8	81,19	7,2	7,2	1,3	$16^{+0,26}_{+0,13}$	40	12	18,3	265
140 005 21	08 B-1	1/2 x 5/16“	21	89,7	85,22	7,2	7,2	1,3	$16^{+0,26}_{+0,13}$	40	12	18,3	289
140 006 13	10 B-1	5/8 x 3/8“	13	73,0	66,32	9,1	9,1	1,6	$16^{+0,26}_{+0,13}$	40	12	18,3	215
140 006 14	10 B-1	5/8 x 3/8“	14	78,0	71,34	9,1	9,1	1,6	$16^{+0,26}_{+0,13}$	40	12	18,3	245
140 006 15	10 B-1	5/8 x 3/8“	15	83,0	73,36	9,1	9,1	1,6	$16^{+0,26}_{+0,13}$	40	12	18,3	285
140 006 16	10 B-1	5/8 x 3/8“	16	88,0	81,37	9,1	9,1	1,6	$16^{+0,26}_{+0,13}$	40	12	18,3	325
140 006 00	10 B-1	5/8 x 3/8“	17	93,0	86,39	9,1	9,1	1,6	$16^{+0,26}_{+0,13}$	40	12	18,3	355
140 006 18	10 B-1	5/8 x 3/8“	18	98,3	91,42	9,1	9,1	1,6	$16^{+0,26}_{+0,13}$	40	12	18,3	405
140 006 21	10 B-1	5/8 x 3/8“	21	113,4	106,52	9,1	9,1	1,6	$16^{+0,26}_{+0,13}$	40	12	18,3	565
140 007 12	12 B-1	3/4 x 7/16“	12	81,5	73,60	11,1	11,1	2,0	$16^{+0,26}_{+0,13}$	40	12	18,3	280
140 007 13	12 B-1	3/4 x 7/16“	13	87,5	79,59	11,1	11,1	2,0	$16^{+0,26}_{+0,13}$	40	12	18,3	340
140 007 00	12 B-1	3/4 x 7/16“	15	99,8	91,63	11,1	11,1	2,0	$16^{+0,26}_{+0,13}$	40	12	18,3	470
140 007 16	12 B-1	3/4 x 7/16“	16	105,5	97,65	11,1	11,1	2,0	$16^{+0,26}_{+0,13}$	40	12	18,3	540
140 008 00	16 B-1	1“ x 17,02mm	12	109,0	98,14	16,2	16,2	2,5	$20^{+0}_{-0,01}$	47	14	17,7	705
140 008 15	16 B-1	1“ x 17,02mm	15	133,0	122,17	16,2	16,2	2,5	$20^{+0}_{-0,01}$	47	14	17,7	1185
140 008 17	16 B-1	1“ x 17,02mm	17	149,0	138,24	16,2	16,2	2,5	$20^{+0}_{-0,01}$	47	14	17,7	1545
140 009 00	20 B-1	1 1/4 x 3/4“	13	147,8	132,65	18,5	18,5	3,5	$25^{+0}_{-0,01}$	52	15	21,0	1610

Mounting Screws for tensioning Wheels KSP

Material: Steel C45, zinc-plated.

Product No. 140 000 01: Screw for chain tensioning wheels KSP up to size 12 B-1 (bore 16mm).

Product No. 140 008 01: Screw for chain tensioning wheel KSP, only for size 16 B-1 (bore 20mm).

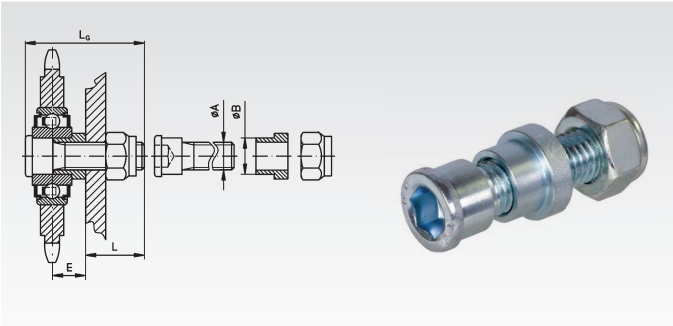

Product No.	A	B mm	E mm	L mm	L_G mm	Weight g
140 000 01	M12	16	15	25	52	80
140 008 01	M16	20	25	28	66	160

Loctite thread locking and bonding products page 811.

Chain Tensioning Wheels KSP-R with Bearing for Single-Strand Roller Chain DIN ISO 606, Stainless Steel

Material: Sprocket stainless steel 1.4305.
Ball bearing stainless steel.

Ready-to-mount idlers, complete with bearing.

Cost-efficient. Can be mounted at the deflection or tensioning points. Perfect workmanship and stable mounting of the ball bearing with shields on both sides guarantee a high resistance against breakage and wear. Maintenance-free bearing, with grease filling.

Temperature range: -20° to +120°C.

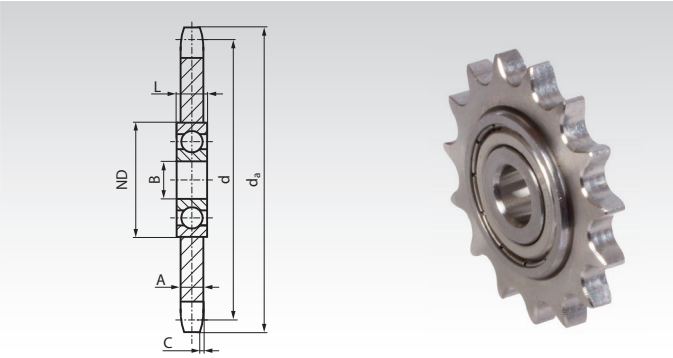

Ordering Details: e.g.: Product No. 140 990 01, Chain Tensioning Wheel KSP-R, 06 B-1

Product No.	DIN ISO	Pitch Inch	Number of teeth	d_a mm	d mm	A mm	C mm	B mm	ND mm	L mm	Weight kg
140 990 01	06 B-1	3/8 x 7/32“	15	49,5	45,81	5,3	1,0	$10^{+0}_{-0,008}$	30	9	0,06
140 990 05	08 B-1	1/2 x 5/16“	15	65,9	61,09	7,2	1,3	$10^{+0}_{-0,008}$	30	9	0,15
140 990 06	10 B-1	5/8 x 3/8“	15	83,2	76,36	9,1	1,6	$12^{+0}_{-0,008}$	37	12	0,27
140 990 07	12 B-1	3/4 x 7/16“	15	99,8	91,63	11,1	2,0	$12^{+0}_{-0,008}$	37	12	0,47
140 990 08	16 B-1	1“ x 17,02mm	13	117,7	106,12	16,2	2,5	$20^{+0}_{-0,010}$	52	15	0,88

Sprocket Sets for Chain Tensioners Single, Stainless Steel

Material: Sprocket stainless steel 1.4305.
Ball bearing, screw and nuts stainless steel.

The sprocket can be moved on the screw and thus be aligned with the chain. It is locked in the desired position with the nuts. The permanently lubricated 2-Z bearings are sealed on both sides and guarantee perfect running of the sprocket.

Temperature range: -20° to +120°C.

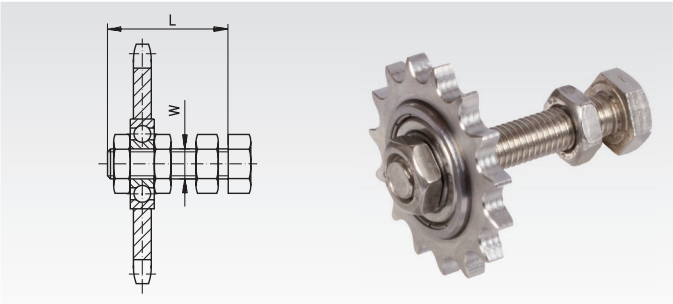

Ordering Details: e.g.: Product No. 140 995 01, Sprocket Set for Chain Tensioner 06 B-1

Product No.	Matching Tensioning Element Size	DIN ISO	Number of Teeth	Pitch Ø mm	L mm	W mm	Weight kg
140 995 01	1 and 2	06 B - 1	15	45,81	55	M10	0,08
140 995 05	1 and 2	08 B - 1	15	61,08	55	M10	0,20
140 995 06	3	10 B - 1	15	76,36	80	M12	0,30
140 995 07	3	12 B - 1	15	91,63	80	M12	0,51
140 995 08	4	16 B - 1	13	106,14	100	M20	0,95

Chain Tensioners SPANN-BOX® Size 0, for Roller Chains DIN ISO 606 (ex DIN 8187)

Material: Housing from thermoplast.
Chain rider from low pressure polyethylene PE-UHMW.
Screws and spring from stainless steel.

These small, ready-to install tensioners enable noise reduction and wear reduction at chain drives.

- With spiral, linear spring. On choice two tensioning forces.
- With colored wear-off indicator: Green: o.k. Yellow: still o.k. Red: Tensioning force too low (below 32N or 60N).
- Usable travel up to the end of the yellow range: About 32mm. Total travel about 40mm.
- Interchangeable with similar parts of other suppliers.

Temperature range: -20°C to +60°C (short time up to +80°C).

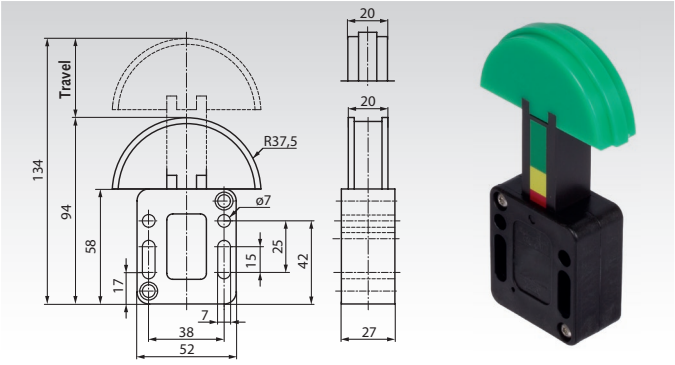

Ordering Details: e.g.: Product No. 140 401 01, Spann-Box Size 0, low Tensioning Force, 06 B-1

SPANN-BOX® Size 0 with low Tensioning Force

Product No.	DIN ISO	Pitch Inch	Tens. Force N	Weight g
140 401 01	≤ 06 B-1	3/8 x 7/32"	58 - 32	130
140 401 05*	08 B-1	1/2 x 5/16"	58 - 32	130
140 401 05*	10 B-1	5/8 x 3/8"	58 - 32	135
140 401 07	12 B-1	3/4 x 7/16"	58 - 32	135
140 401 21	06 B-2	3/8 x 7/32"	58 - 32	130
140 401 25	08 B-2	1/2 x 5/16"	58 - 32	130
140 401 26	10 B-2	5/8 x 3/8"	58 - 32	135

* This size fits 08 B-1 and 10 B-1.

SPANN-BOX® Size 0 with high Tensioning Force

Product No.	DIN ISO	Pitch Inch	Tens. Force N	Weight g
140 402 01	≤ 06 B-1	3/8 x 7/32"	132 - 60	130
140 402 05*	08 B-1	1/2 x 5/16"	132 - 60	130
140 402 05*	10 B-1	5/8 x 3/8"	132 - 60	135
140 402 07	12 B-1	3/4 x 7/16"	132 - 60	135
140 402 21	06 B-2	3/8 x 7/32"	132 - 60	130
140 402 25	08 B-2	1/2 x 5/16"	132 - 60	130
140 402 26	10 B-2	5/8 x 3/8"	132 - 60	135

Mounting of SPANN-BOX® Size 0

At front- and backside, there is a small hole for a locking pin (pin is included at the bottom of the housing). With this pin, the tensioner can be locked at maximum force for easy mounting. Recommendation: Mounting on slack side. The chain should be in contact with several links. To reach a sufficient contact angle, it may be useful to mount an idler wheel (e.g. KSP or KSP-R) near by the tensioner.

Operating Instructions at www.maedler.de in the section Downloads

Technical Note to Chain Tensioners SPANN-BOX® and SPANN-BOY®

Function: These tensioners are powered by linear spiral springs. These elastic tensioners reduce the chain slack and compensate the elongation of chains.

Temperature range: The standard versions are suitable for -20°C to +60°C (short time up to +80°C). Special versions are available on request for temperatures down to -40°C or up to +200°C.

Determination of tensioning force: The tensioners SPANN-BOX® size 0 can be ordered with two different tensioning forces. At SPANN-BOX® size 1 and SPANN-BOY® TS, the tensioning force can get adjusted at different amounts. The weight of the loose chain slack should not be greater than the half of the maximum tensioning force.

Mounting: The tensioner should be placed at the loose chain slack, near by the driving wheel. For low wear-off, several links should be in contact with the chain rider. To reach a sufficient contact angle, it may be useful to mount an idler wheel (e.g. KSP or KSP-R) near by the tensioner. For easy mounting, all tensioners can get locked at maximum tensioning force. After mounting, the tensioners must get unlocked.

Maintenance: At all tensioners, the colored wear-off indicator must be checked periodically. The time of period depends on the operating conditions of the chain drive. When the red marking can be seen, the tensioning force is too low. Then, after locking the tensioner at maximum spring force and loosing the mounting screws, the tensioner can get re-adjusted, closer to the chain. Slot holes allow a re-adjustment in a wide range. When the chain elonguation exceeds 3%, the chain and chain wheels should be replaced. If the chain rider is worn, also the complete tensioner should be replaced.

Chain Tensioners SPANN-BOX® Size 1, for Roller Chains DIN ISO 606 (ex DIN 8187)

Material: Housing from steel, zinc plated, black lackered.
Chain rider from low pressure polyethylene PE-UHMW.
Material Version Stainless: Housing from stainless steel. STAINLESS

These ready-to-install tensioners enable noise reduction and wear reduction at chain drives.

- With three springs. On choice: Two tensioning force versions. At both versions, three different forces can get activated.
- With colored wear-off indicator: Green: o.k. Yellow: still o.k. Red: Tensioning force too low.
- Usable travel up to the end of the yellow range: About 32mm. Total travel about 40mm.
- Interchangeable with similar parts of other suppliers.

Temperature range: -20°C to +60°C (short time up to +80°C).

Ordering Details: e.g.: Product No. 140 403 01, Spann-Box Size 1, Short, Low Force, 06 B-1

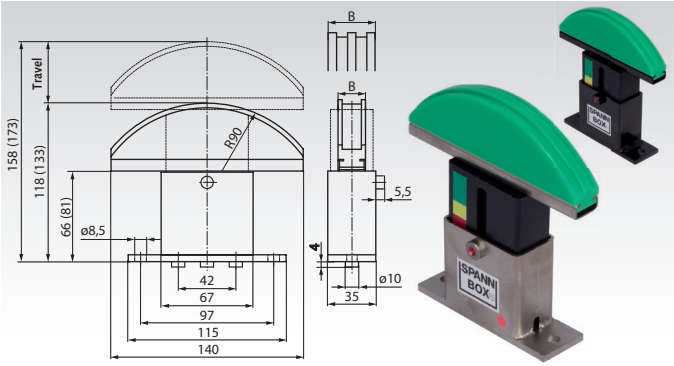

SPANN-BOX® Size 1, Short, Low Force

Product No.	DIN ISO	Pitch Inch	B mm	H mm	Weight g
140 403 01	≤06 B-1	3/8 x 7/32“	20	118	670
140 403 05	08 B-1	1/2 x 5/16“	20	118	670
140 403 06	10 B-1	5/8 x 3/8“	20	118	670
140 403 07	12 B-1	3/4 x 7/16“	20	118	670
140 403 08	16 B-1	1“ x 17,02	20	118	670
140 403 09	20 B-1	1 1/4 x 3/4“	20	118	670
140 403 21	06 B-2	3/8 x 7/32“	20	118	670
140 403 25	08 B-2	1/2 x 5/16“	20	118	670
140 403 26	10 B-2	5/8 x 3/8“	25	118	750
140 403 27	12 B-2	3/4 x 7/16“	30	118	750
140 403 28	16 B-2	1“ x 17,02	45	118	820
140 403 31	06 B-3	3/8 x 7/32“	25	118	740
140 403 35	08 B-3	1/2 x 5/16“	30	118	750
140 403 36	10 B-3	5/8 x 3/8“	40	118	790
140 403 37	12 B-3	3/4 x 7/16“	45	118	810

SPANN-BOX® Size 1, Short, High Force

Product No.	DIN ISO	Pitch Inch	B mm	H mm	Weight g
140 404 01	≤06 B-1	3/8 x 7/32“	20	118	670
140 404 05	08 B-1	1/2 x 5/16“	20	118	670
140 404 06	10 B-1	5/8 x 3/8“	20	118	670
140 404 07	12 B-1	3/4 x 7/16“	20	118	670
140 404 08	16 B-1	1“ x 17,02	20	118	670
140 404 09	20 B-1	1 1/4 x 3/4“	20	118	670
140 404 21	06 B-2	3/8 x 7/32“	20	118	670
140 404 25	08 B-2	1/2 x 5/16“	20	118	670
140 404 26	10 B-2	5/8 x 3/8“	25	118	750
140 404 27	12 B-2	3/4 x 7/16“	30	118	750
140 404 28	16 B-2	1“ x 17,02	45	118	820
140 404 31	06 B-3	3/8 x 7/32“	25	118	740
140 404 35	08 B-3	1/2 x 5/16“	30	118	750
140 404 36	10 B-3	5/8 x 3/8“	40	118	790
140 404 37	12 B-3	3/4 x 7/16“	45	118	810

SPANN-BOX® Size 1, Short, High Force, Stainless

Product No. STAINLESS	DIN ISO	Pitch Inch	B mm	H mm	Weight g
140 405 01	≤06 B-1	3/8 x 7/32“	20	118	670
140 405 05	08 B-1	1/2 x 5/16“	20	118	670
140 405 06	10 B-1	5/8 x 3/8“	20	118	670
140 405 07	12 B-1	3/4 x 7/16“	20	118	670
140 405 08	16 B-1	1“ x 17,02	20	118	670
140 405 09	20 B-1	1 1/4 x 3/4“	20	118	670
140 405 21	06 B-2	3/8 x 7/32“	20	118	670
140 405 25	08 B-2	1/2 x 5/16“	20	118	670
140 405 26	10 B-2	5/8 x 3/8“	25	118	750
140 405 27	12 B-2	3/4 x 7/16“	30	118	750
140 405 28	16 B-2	1“ x 17,02	45	118	820
140 405 31	06 B-3	3/8 x 7/32“	25	118	740
140 405 35	08 B-3	1/2 x 5/16“	30	118	750
140 405 36	10 B-3	5/8 x 3/8“	40	118	790
140 405 37	12 B-3	3/4 x 7/16“	45	118	810

SPANN-BOX® Size 1, Long, High Force

Product No.	DIN ISO	Pitch Inch	B mm	H mm	Weight g
140 406 01	≤06 B-1	3/8 x 7/32“	20	133	740
140 406 05	08 B-1	1/2 x 5/16“	20	133	740
140 406 06	10 B-1	5/8 x 3/8“	20	133	740
140 406 07	12 B-1	3/4 x 7/16“	20	133	740
140 406 08	16 B-1	1“ x 17,02	20	133	740
140 406 09	20 B-1	1 1/4 x 3/4“	20	133	740
140 406 21	06 B-2	3/8 x 7/32“	20	133	810
140 406 25	08 B-2	1/2 x 5/16“	20	133	810
140 406 26	10 B-2	5/8 x 3/8“	25	133	810
140 406 27	12 B-2	3/4 x 7/16“	30	133	810
140 406 28	16 B-2	1“ x 17,02	45	133	890
140 406 31	06 B-3	3/8 x 7/32“	25	133	820
140 406 35	08 B-3	1/2 x 5/16“	30	133	820
140 406 36	10 B-3	5/8 x 3/8“	40	133	820
140 406 37	12 B-3	3/4 x 7/16“	45	133	890

SPANN-BOX® Size 1, Long, High Force, Stainless

Product No. STAINLESS	DIN ISO	Pitch Inch	B mm	H mm	Weight g
140 407 01	≤06 B-1	3/8 x 7/32“	20	133	740
140 407 05	08 B-1	1/2 x 5/16“	20	133	740
140 407 06	10 B-1	5/8 x 3/8“	20	133	740
140 407 07	12 B-1	3/4 x 7/16“	20	133	740
140 407 08	16 B-1	1“ x 17,02	20	133	740
140 407 09	20 B-1	1 1/4 x 3/4“	20	133	740
140 407 21	06 B-2	3/8 x 7/32“	20	133	810
140 407 25	08 B-2	1/2 x 5/16“	20	133	810
140 407 26	10 B-2	5/8 x 3/8“	25	133	810
140 407 27	12 B-2	3/4 x 7/16“	30	133	810
140 407 28	16 B-2	1“ x 17,02	45	133	890
140 407 31	06 B-3	3/8 x 7/32“	25	133	820
140 407 35	08 B-3	1/2 x 5/16“	30	133	820
140 407 36	10 B-3	5/8 x 3/8“	40	133	820
140 407 37	12 B-3	3/4 x 7/16“	45	133	890

Adjustable Tensioning Forces:

On choice, there are two versions, with low tensioning force or with high tensioning force. Both versions have three springs, which can get activated independent from each other to reach three different tensioning forces:

Version with low tensioning force:

1 spring activated: 58 - 32 N.
2 springs activated: 116 - 64 N.
3 springs activated: 174 - 96 N.

Version with high tensioning force:

1 spring activated: 132 - 60 N.
2 springs activated: 264 - 120 N.
3 springs activated: 396 - 180 N.

Operating Instructions at www.maedler.de in the section Downloads

Chain Tensioners SPANN-BOY® TS, for Roller Chains DIN ISO 606 (ex DIN 8187)

Material: Housing from steel, zinc plated, black lackered.
Chain rider from low pressure polyethylene PE-UHMW.
Material Version Stainless: Housing from stainless steel. STAINLESS

These very low, ready-to-install tensioners enable noise reduction and wear reduction at chain drives.

- Needed space below chain only 40mm.
- With two springs of different force, which can get activated separately or together. So it is possible to adjust three different tensioning forces.
- Usable travel about 40mm.
- Interchangeable with similar parts of other suppliers.

Temperature range: -20°C to +60°C (short time up to +80°C).

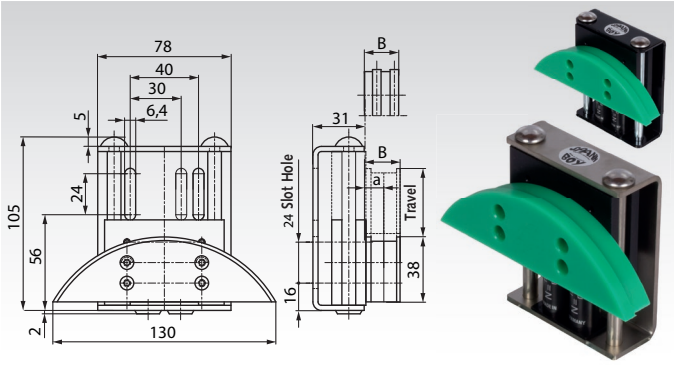

Ordering Details: e.g.: Product No. 140 408 01, Spann-Boy TS, 06 B-1

SPANN-BOY® TS

Product No.	DIN ISO	Pitch Inch	a mm	B mm	Weight g
140 408 01	≤06 B-1	3/8 x 7/32“	10,0	20	460
140 408 05	08 B-1	1/2 x 5/16“	16,5	20	460
140 408 06	10 B-1	5/8 x 3/8“	15,6	20	460
140 408 07	12 B-1	3/4 x 7/16“	14,8	20	460
140 408 21	06 B-2	3/8 x 7/32“	7,5	20	460
140 408 25	08 B-2	1/2 x 5/16“	15,2	32	460
140 408 26	10 B-2	5/8 x 3/8“	11,3	32	500
140 408 30	05 B-3	8mm x 3mm	7,4	20	480
140 408 31	06 B-3	3/8 x 7/32“	9,4	32	480

SPANN-BOY® TS, Stainless

Product No. STAINLESS	DIN ISO	Pitch Inch	a mm	B mm	Weight g
140 409 01	≤06 B-1	3/8 x 7/32“	10,0	20	460
140 409 05	08 B-1	1/2 x 5/16“	16,5	20	460
140 409 06	10 B-1	5/8 x 3/8“	15,6	20	460
140 409 07	12 B-1	3/4 x 7/16“	14,8	20	460
140 409 21	06 B-2	3/8 x 7/32“	7,5	20	460
140 409 25	08 B-2	1/2 x 5/16“	15,2	32	460
140 409 26	10 B-2	5/8 x 3/8“	11,3	32	500
140 409 30	05 B-3	8mm x 3mm	7,4	20	480
140 409 31	06 B-3	3/8 x 7/32“	9,4	32	480

Adjustable Tensioning Forces:

The SPANN-BOY® TS has two different springs: one with low force and one with high force. These springs gan get activated separately or together. So it is possible to adjust three different tensioning forces:

Only the low-force spring activated: 58 - 32 N.
Only the high-force spring activated: 132 - 60 N.
Both springs together activated: 190 - 96 N.

Operating Instructions at www.maedler.de in the section Downloads

Chain Tensioners for Single-Strand Roller Chains DIN ISO 606 (ex DIN 8187)

Material: Housing sintered steel or grey cast iron GG20, lever St52, sprocket made from steel.

This tensioning element, a continually-tensioning torsion element, prolongs the service life of chain and belt drives by at least 30%, and radically reduces maintenance and repair work. The unique operating principle of this spring offers a long tensioning distance, especially as the lever can be pre-tensioned by up to 30° in both directions. The permanent torsion force does not only automatically compensate the chain elongation, the rubber mounted element also dampens vibrations and shocks in the entire drive. Other advantages: chain track adjustable, rubber suspension, adjustable at an angle of 360°, tensioning pressure steplessly adjustable from "normal" to " hard". Can be used for both tensioning directions. Temperature range: -20° to +80°C.

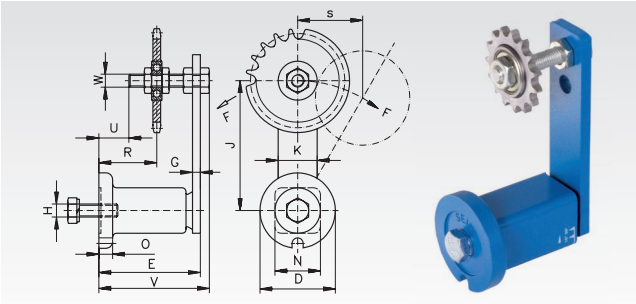

Ordering Details: e.g.: Product No. 140 802 00, Tensioner and 140 501 01, Sprocket

DIN ISO	Product No. Tensioning Element	Product No. Single Sprocket	No. of Teeth	Pitch Ø mm	max. Tensioning Force N	D mm	E mm	H mm	J mm	N mm	R mm	S max. mm	U mm	V mm	W mm	Weight kg
06 B - 1	**140 802 00**	**140 501 01**	15	45,81	0- 350	58	79 $^{+1,5}_{-0,5}$	M10	100	35	34-55	50	23	85	M10	0,75
081	**140 802 16**	**140 502 01**	18	73,14	0- 350	58	79 $^{+1,5}_{-0,5}$	M10	100	35	40-48	50	23	88	M16	0,95
083	**140 802 16**	**140 503 01**	18	73,14	0- 350	58	79 $^{+1,5}_{-0,5}$	M10	100	35	40-48	50	23	88	M16	0,96
08 B - 1	**140 802 00**	**140 505 01**	15	61,08	0- 350	58	79 $^{+1,5}_{-0,5}$	M10	100	35	34-55	50	23	85	M10	0,80
10 B - 1	**140 803 00**	**140 506 01**	15	76,36	0- 800	78	108 $^{+2}_{-0,5}$	M12	130	52	42-80	65	27	115	M12	2,05
12 B - 1	**140 803 00**	**140 507 01**	15	91,63	0- 800	78	108 $^{+2}_{-0,5}$	M12	130	52	42-80	65	27	115	M12	2,25
16 B - 1	**140 804 00**	**140 508 01**	13	106,14	0- 1500	95	140 $^{+2}_{-0,5}$	M16	175	66	60-100	87,5	40	153	M20	4,80

Chain Tensioners for Double-Strand Roller Chains DIN ISO 606 (ex DIN 8187)

Material: Housing sintered steel or grey cast iron GG20, lever St52, sprocket made from steel.

This tensioning element, a continually-tensioning torsion element, prolongs the service life of chain and belt drives by at least 30%, and radically reduces maintenance and repair work. The unique operating principle of this spring offers a long tensioning distance, especially as the lever can be pre-tensioned by up to 30° in both directions. The permanent torsion force does not only automatically compensate the chain elongation, the rubber mounted element also dampens vibrations and shocks in the entire drive. Other advantages: chain track adjustable, rubber suspension, adjustable at an angle of 360°, tensioning pressure steplessly adjustable from "normal" to " hard". Can be used for both tensioning directions. Temperature range: -20° to +80°C.

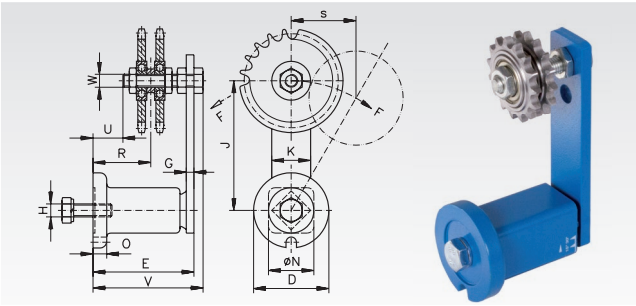

Ordering Details: e.g.: Product No. 140 802 00, Tensioner and 140 521 01, Sprocket

DIN ISO	Product No. Tensioning Element	Product No. Double Sprocket	No. of Teeth	Pitch Ø mm	max. Tensioning Force N	D mm	E mm	H mm	J mm	N mm	R mm	S max. mm	U mm	V mm	W mm	Weight kg
06 B - 2	**140 802 00**	**140 521 01**	15	45,81	0- 350	58	79 $^{+1,5}_{-0,5}$	M10	100	35	39-50	50	23	85	M10	0,80
08 B - 2	**140 802 00**	**140 525 01**	15	61,08	0- 350	58	79 $^{+1,5}_{-0,5}$	M10	100	35	41-48	50	23	85	M10	0,80
10 B - 2	**140 803 00**	**140 526 01**	15	76,36	0- 800	78	108 $^{+2}_{-0,5}$	M12	130	52	50-71	65	27	115	M12	2,30
12 B - 2	**140 803 00**	**140 527 01**	15	91,63	0- 800	78	108 $^{+2}_{-0,5}$	M12	130	52	51-70	65	27	115	M12	2,75
16 B - 2	**140 804 00**	**140 528 01**	13	106,14	0- 1500	95	140 $^{+2}_{-0,5}$	M16	175	66	56-85	87,5	20	153	M20	5,65

Chain Tensioners for Triple-Strand Roller Chains DIN ISO 606 (ex DIN 8187)

Material: Housing sintered steel or grey cast iron GG20, lever St52, sprocket made from steel.

This tensioning element, a continually-tensioning torsion element, prolongs the service life of chain and belt drives by at least 30%, and radically reduces maintenance and repair work. The unique operating principle of this spring offers a long tensioning distance, especially as the lever can be pre-tensioned by up to 30° in both directions. The permanent torsion force does not only automatically compensate the chain elongation, the rubber mounted element also dampens vibrations and shocks in the entire drive. Other advantages: chain track adjustable, rubber suspension, adjustable at an angle of 360°, tensioning pressure steplessly adjustable from "normal" to " hard". Can be used for both tensioning directions. Temperature range: -20° to +80°C.

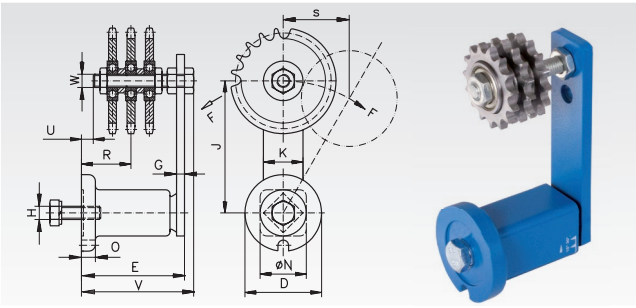

Ordering Details: e.g.: Product No. 140 802 00, Tensioner and 140 531 01, Sprocket

DIN ISO	Product No. Tensioning Element	Product No. Triple Sprocket	No. of Teeth	Pitch Ø mm	max. Tensioning Force N	D mm	E mm	H mm	J mm	N mm	R mm	S max. mm	U mm	V mm	W mm	Weight kg
06 B - 3	**140 802 00**	**140 531 01**	15	45,81	0- 350	58	79 $^{+1,5}_{-0,5}$	M10	100	35	25-45	50	6	85	M10	0,90
08 B - 3	**140 802 12**	**140 535 01**	15	61,08	0- 350	58	79 $^{+1,5}_{-0,5}$	M10	100	35	23-47	50	6	85	M12	0,90
10 B - 3	**140 803 00**	**140 536 01**	15	76,36	0- 800	78	108 $^{+2}_{-0,5}$	M12	130	52	40-64	65	15	115	M12	3,25
12 B - 3	**140 804 00**	**140 537 01**	15	91,63	0- 1500	95	140 $^{+2}_{-0,5}$	M16	175	66	56-80	87,5	30	153	M20	6,50

Sprocket Sets for Chain Tensioners Single

Material: Steel St40/50. Screw zinc-plated steel.

The sprocket can be moved on the screw and thus be aligned with the chain. It is locked in the desired position with the nuts. The permanently lubricated 2-Z bearings are sealed on both sides and guarantee perfect running of the sprocket.

Temperature range: -20° to +120°C.

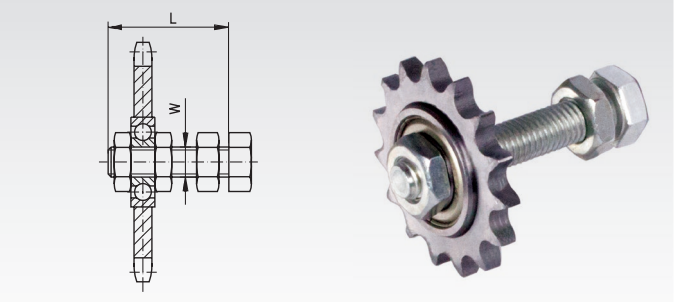

Ordering Details: e.g.: Product No. 140 501 01, Sprocket Set for Chain Tensioner Size 1

Product No.	Matching Tensioning Element Size	DIN ISO	No. of Teeth	Pitch Ø mm	L mm	W mm	Weight kg
140 501 01	1 and 2	06 B - 1	15	45,81	55	M10	0,08
140 502 01*	1[1)] and 2[2)]	081	18	73,14	55	M16[3)]	0,19
140 503 01*	1[1)] and 2[2)]	083	18	73,14	55	M16[3)]	0,21
140 505 01	1 and 2	08 B - 1	15	61,08	55	M10	0,20
140 506 01	3	10 B - 1	15	76,36	80	M12	0,30
140 507 01	3	12 B - 1	15	91,63	80	M12	0,51
140 508 01	4	16 B - 1	13	106,14	100	M20	0,95

[1)] Tensioning element bore needs to be drilled out. [2)] Matching Product No. 140 802 16. [3)] With special ball bearing, length of inner ring 18.3mm.

Sprocket Sets for Chain Tensioners, Double

Material: Steel St40/50. Screw zinc-plated steel.

The sprocket can be moved on the screw and thus be aligned with the chain. It is locked in the desired position with the nuts. The permanently lubricated 2-Z bearings are sealed on both sides and guarantee perfect running of the sprocket.

Accurate-to-size spacers guarantee perfect meshing of teeth and sprocket.

Temperature range: -20° to +120°C.

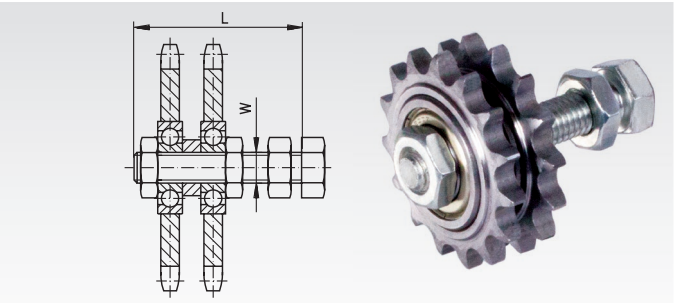

Ordering Details: e.g.: Product No. 140 521 01, Sprocket Set for Chain Tensioner Size 1

Product No.	Matching Tensioning Element Size	DIN ISO	No. of Teeth	Pitch Ø mm	L mm	W mm	Weight kg
140 521 01	1 and 2	06 B - 2	15	45,81	55	M10	0,15
140 525 01	1 and 2	08 B - 2	15	61,08	70	M10	0,40
140 526 01	3	10 B - 2	15	76,36	80	M12	0,60
140 527 01	3	12 B - 2	15	91,63	80	M12	1,00
140 528 01	4	16 B - 2	13	106,14	120	M20	1,90

Sprocket Sets for Chain Tensioners, Triple

Material: Steel St40/50. Screw zinc-plated steel.

The sprocket can be moved on the screw and thus be aligned with the chain. It is locked in the desired position with the nuts. The permanently lubricated 2-Z bearings are sealed on both sides and guarantee perfect running of the sprocket.

Accurate-to-size spacers guarantee perfect meshing of teeth and sprocket.

Temperature range: -20° to +120°C.

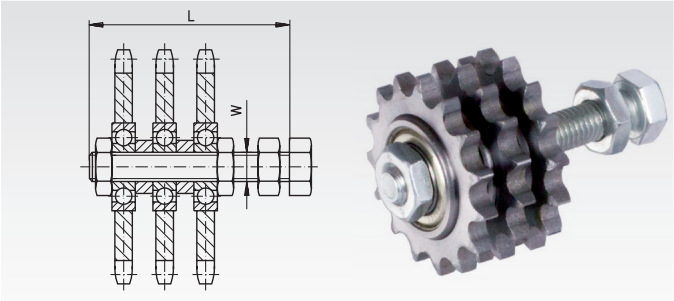

Ordering Details: e.g.: Product No. 140 531 01, Sprocket Set for Chain Tensioner Size 2

Product No.	Matching Tensioning Element Size	DIN ISO	No. of Teeth	Pitch Ø mm	L mm	W mm	Weight kg
140 531 01	2	06 B - 3	15	45,81	70	M10	0,25
140 535 01	2* and 3	08 B - 3	15	61,08	80	M12	0,50
140 536 01	3	10 B - 3	15	76,36	80	M12	0,95
140 537 01	4	12 B - 3	15	91,63	120	M20	1,50

* Matching tensioning element Product No. 140 802 12.

Chain Rider Sets

Material: Plastic POM. Screw zinc-plated steel.

To be mounted on the suitable tensioning element to create a ready-to-mount, cost-efficient chain tensioner. The shape of the rider, made from high-grade, friction resistant, industrial plastic, means the rider can be used on both rider sides and the large radius guarantees quiet operation. The maximum chain speed must not exceed 1.5 m/sec. Temperature range: -20° to +80°C.

Tensioning Element has to be ordered separately.

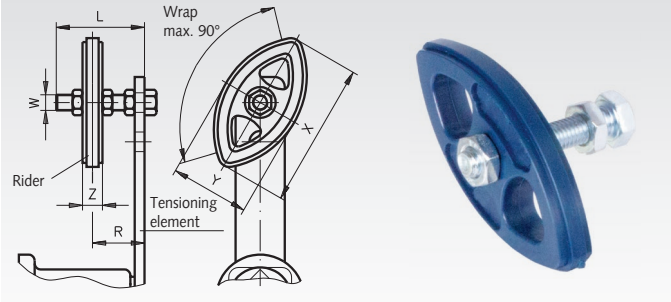

Ordering Details: e.g.: Product No. 140 851 00 Chain Rider Set 06 B-1

Product No.	Suitable for Tensioning Element Size	DIN ISO	W mm	L mm	X mm	Y mm	Z mm	Adjustment Range R mm	Weight kg
140 851 00	0	06 B - 1	M8	45	74	40	10,2	19 - 34	0,05
140 855 00	1	08 B - 1	M10	55	96	50	13,9	23 - 41	0,10
140 856 00	2	10 B - 1	M10	55	126	65	16,6	24 - 39	0,12
140 857 00	3	12 B - 1	M12	80	148	74	19,5	30 - 61	0,18

Tensioning Elements in Standard Version

Material: Housing up to Ø 78 mm made from sintered steel, over Ø 78 mm made from grey cast iron GG20, lever made from St52.
Can be used for tensioning all common kinds of chain and belt drives. The elastomeric inserts are based on highly-elastic natural rubber with a good shape memory and are designed for applications in temperatures from -40° to +80°C
The tensioning elements are painted blue and supplied with a zinc-plated screw and spring washer. Can be used for both tensioning directions. Temperature range: -40° to +80°C.

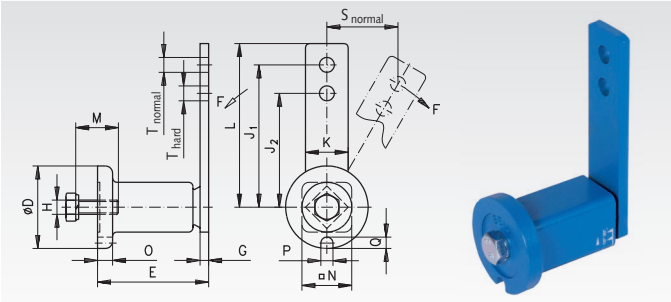

Ordering Details: e.g.: Product No. 140 800 00, Tensioning Element Ø 35 mm

Product No.	Size	F max. normal N	F max. hard N	s max. normal mm	s max. hard mm	D mm	E mm	G mm	H mm	J_1 mm	J_2 mm	K mm	L mm	M mm	N mm	O mm	P mm	Q mm	T mm	M_A Nm	Weight kg
140 800 00	0	80	106	40	30	35	$51^{+1,0}_{-0,5}$	5	M6	80	60	20	90	20	22	6	8	5	8,5	10	0,2
140 801 00	1	135	168	50	40	45	$64^{+1,0}_{-0,5}$	5	M8	100	80	25	112,5	25	30	8	8,5	6	10,5	25	0,4
140 802 00	2	350	437	50	40	58	$79^{+1,5}_{-0,5}$	7	M10	100	80	30	115	30	35	10,5	8,5	8	10,5	49	0,6
140 802 12	2	350	437	50	40	58	$79^{+1,5}_{-0,5}$	7	M10	100	80	30	115	30	35	10,5	8,5	8	12	49	0,6
140 802 16	2	350	437	50	40	58	$79^{+1,5}_{-0,5}$	7	M10	100	80	30	115	30	35	10,5	8,5	8	16	49	0,6
140 803 00	3	800	1040	65	50	78	$108^{+2}_{-0,5}$	8	M12	130	100	50	155	40	52	15	10,5	10	12,5	86	1,7
140 804 00	4	1500	1875	87,5	70	95	$140^{+2}_{-0,5}$	10	M16	175	140	60	205	40	66	15	12,5	12	20,5	210	3,55

Tensioning Elements, Zinc Plated and Oil Resistant

Material: Casing made from sintered steel or grey cast iron GG20, lever made from St52.

The design of these tensioning elements is identical to the standard version, but they are zinc plated and the synthetic spring elements are resistant to mineral oils. These components are especially suited for "outdoor" applications, e.g. for construction machinery or for use inside the oilbath of a gearbox. The tensioning elements are marked with a yellow dot on the lever. Can be used for both tensioning directions.
Temperature range: -40° to +120°C.

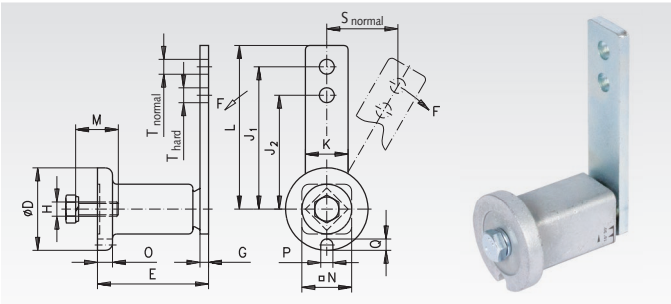

Ordering Details: e.g.: Product No. 140 800 03, Tensioning Element Ø 35 mm

Product No.	Size	F max. normal N	F max. hard N	s max. normal mm	s max. hard mm	D mm	E mm	G mm	H mm	J_1 mm	J_2 mm	K mm	L mm	M mm	N mm	O mm	P mm	Q mm	T mm	M_A Nm	Weight kg
140 800 03	0	80	106	40	30	35	$51^{+1,0}_{-0,5}$	5	M6	80	60	20	90	20	22	6	8	5	8,5	10	0,2
140 801 03	1	135	168	50	40	45	$64^{+1,0}_{-0,5}$	5	M8	100	80	25	112,5	25	30	8	8,5	6	10,5	25	0,4
140 802 03	2	350	437	50	40	58	$79^{+1,5}_{-0,5}$	7	M10	100	80	30	115	30	35	10,5	8,5	8	10,5	49	0,6
140 803 03	3	800	1040	65	50	78	$108^{+2}_{-0,5}$	8	M12	130	100	50	155	40	52	15	10,5	10	12,5	86	1,7
140 804 03	4	1500	1875	87,5	70	95	$140^{+2}_{-0,5}$	10	M16	175	140	60	205	40	66	15	12,5	12	20,5	210	3,55

Tensioning Elements with Front Mounting

Material: Housing up to Ø 78 mm made from sintered steel, over Ø 78 mm made from grey cast iron GG20, lever made from St52.

These tensioning elements are in general identical to the standard version. For easier mounting they are fixed from the lever side using an in-and-out screw. A thread has to be cut in the machine housing. The supplied screw is secured for transport with an O-Ring. Can be used for both tensioning directions. Temperature range: -40° to +80°C.

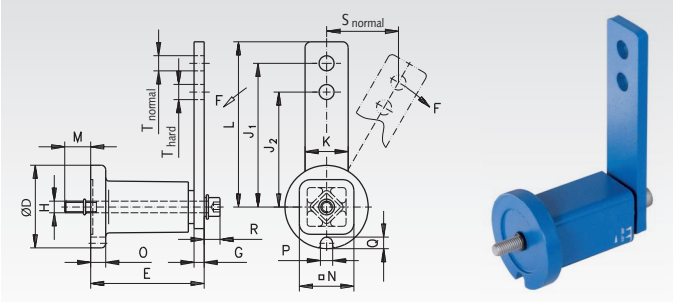

Ordering Details: e.g.: Product No. 140 801 07, Tensioning Element Ø 45 mm

Product No.	Size	F max. normal N	F max. hard N	s max. normal mm	s max. hard mm	D mm	E mm	G mm	H mm	J_1 mm	J_2 mm	K mm	L mm	M mm	N mm	O mm	P mm	Q mm	R mm	T mm	M_A Nm	Weight kg
140 801 07	1	135	168	50	40	45	$64^{+1,0}_{-0,5}$	5	M6	100	80	25	113	12,4	30	8	8,5	6	10	10,5	17	0,4
140 802 07	2	350	437	50	40	58	$79^{+1,5}_{-0,5}$	7	M8	100	80	30	115	18,9	35	10,5	8,5	8	12	10,5	41	0,65
140 803 07	3	800	1040	65	50	78	$108^{+2}_{-0,5}$	8	M10	130	100	50	155	17,5	52	15	11	10	16	12,5	83	1,85
140 804 07	4	1500	1875	87,5	70	95	$140^{+2}_{-0,5}$	10	M12	175	140	60	205	18,0	66	15	13	12	19	20,5	145	3,70

Tensioning Elements Stainless

Material: Stainless steel 1.4301 or 1.4308.

STAINLESS

The design of this tensioning element is identical to the standard version.
Temperature range: -40° to +80°C.

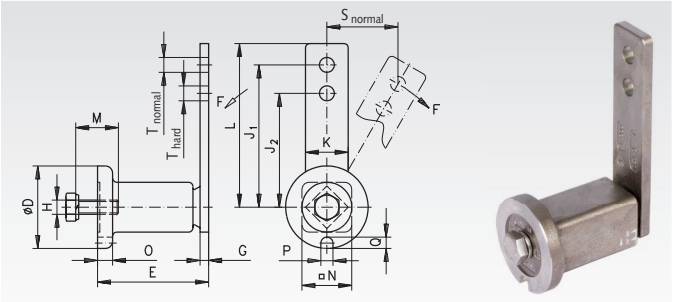

Ordering Details: e.g.: Product No. 140 998 01, Tensioning Element Ø 45 mm

Product No	Size	F max. normal N	F max. hard N	s max. normal mm	s max. hard mm	D mm	E mm	G mm	H mm	J_1 mm	J_2 mm	K mm	L mm	M mm	N mm	O mm	P mm	Q mm	T mm	M_A Nm	Weight kg
140 998 01	1	150	187,5	50	40	45	$64^{+1,0}_{-0,5}$	5	M8	100	80	25	112,5	25	30	8	8,5	6	10,5	25	0,35
140 998 02	2	400	500	50	40	58	$79^{+1,5}_{-0,5}$	7	M10	100	80	30	115	30	35	10,5	8,5	8	10,5	49	0,70
140 998 03	3	860	1118	65	50	78	$108^{+2}_{-0,5}$	8	M12	130	100	50	155	40	52	15	10,5	10	12,5	86	1,90
140 998 04	4	1500	1875	87,5	70	100	$140^{+2}_{-0,5}$	10	M16	175	140	70	205	40	70	15	12,5	12	20,5	210	4,30

Tensioning Elements „Boomerang“

Material: Housing sintered steel, lever St52.

These tensioning elements are used to compensate the slack in extremely long chain drives. The slack length passes in an S-shape through the supplied sprockets or pulleys so that the lever works as a compensator. This system thus offers a triple compensation of the slack compared to standard tensioners.

Application example:

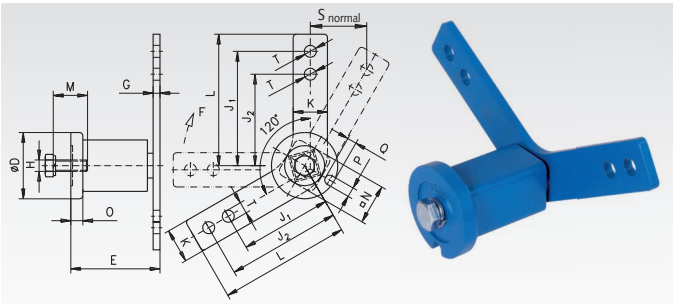

Ordering Details: e.g.: Product No. 140 802 09, Tensioning Element Ø 58 mm

Product No.	Size	F max. normal N	F max. hard N	s max. normal mm	s max. hard mm	D mm	E mm	G mm	H mm	J_1 mm	J_2 mm	K mm	L mm	M mm	N mm	O mm	P mm	Q mm	T mm	M_A Nm	Weight kg
140 802 09	2	175	215	50	40	58	$79^{+1,5}_{-0,5}$	6	M10	100	80	30	115	30	35	10,5	8,5	8	10,5	49	0,75
140 803 09	3	400	520	65	50	78	$108^{+2}_{-0,5}$	8	M12	130	100	50	155	40	52	15	11	10	12,5	86	2,10